Installation Instructions

SICHERT Your Partner

Fiber Connection Cabinet

FCC6

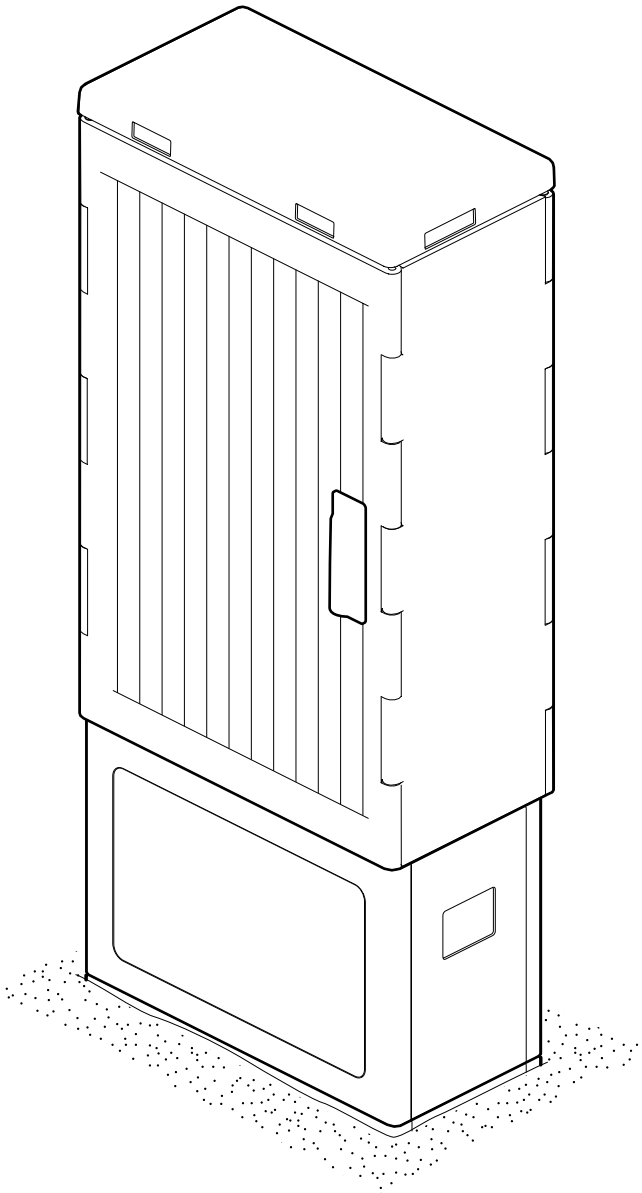

SCAN OR CLICK

Instruction notes for retrofit kits included.

Note also the attached instructions, data sheets and supplementary notes.

Contents

		Page
1	**Safety standards**	3
2	**Technical data of cabinet and plinth**	4...5
3	**Scope of delivery**	6...9
3.1	Standard version	6...7
3.2	Version with overlength storage	8...9
4	**Preparations and notes**	10
5	**Installation of cabinet and plinth**	11...14
6	**Locking system**	15
7	**Concept of routing**	16...19
7.1	Standard version	16...17
7.2	Version with overlength storage	18...19
8	**Installation of the main cable**	20...26
8.1	Loose tube cable	20...24
8.2	Micro duct with cable	25...26
9	**Installation of distribution cable**	27...31
9.1	Standard version	28...29
9.2	Version with overlength storage	30...31
10	**Splice area**	32...37
10.1	Cover for fiber trays	32
10.2	Installation of cables, loose tubes and fiber tubes	33
10.3	Cable and fiber routing	34...37
11	**Fiber tray system**	38...46
12	**Replacement of the cabinet**	48...49
13	**Order data**	50...54
14	**Disassembly and disposal information**	55

1 Safety standards

Explanation of symbols

Note
Important additional information.

Instruction
Refer to instruction.

Attention
Failure to comply may result in damage to property.

Warning
Failure to comply may result in injury.

Danger
Failure to comply will result in death or serious injury.

1 **2** Working steps

A Version

A ① Part or assembly group

Safety information

The personnel for installation, assembly, operation and maintenance must possess the appropriate qualification for this type of work. The operational security of product supplied is only guaranteed when it is used in accordance with the regulations. Relevant standards and guidelines must be observed!

Accident prevention regulations (are among others):

Safety regulations

- Accident prevention regulation „Principles of Prevention“ (DGUV V1) and „Safety Regulations on Artificial Optical Radiation“ (OStrV).

Safety measure

- The inspection of safety devices must be undertaken after completion of the assembly work.
- During the assembly of all feeds the operation of the unit must not be obstructed. Tripping hazards must be prevented. The minimum clearances have to be met.

This instruction manual contains informations to enable the user to work safely and correctly. Only when the manual is understood and adhered to can danger be avoided.

2 Technical data of cabinet and plinth

Outer dimensions of cabinet and plinth

(all dimensions in mm)

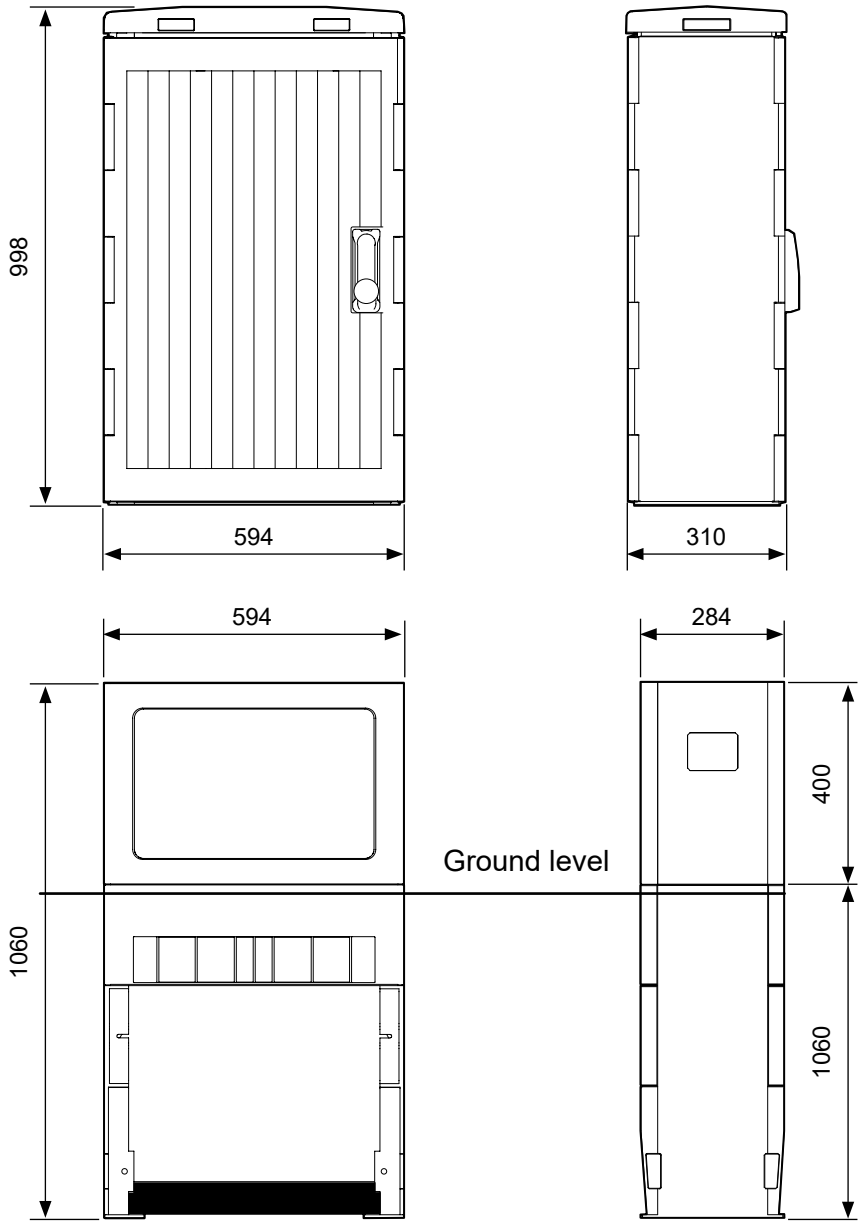

Connecting dimensions (plinth - cabinet)

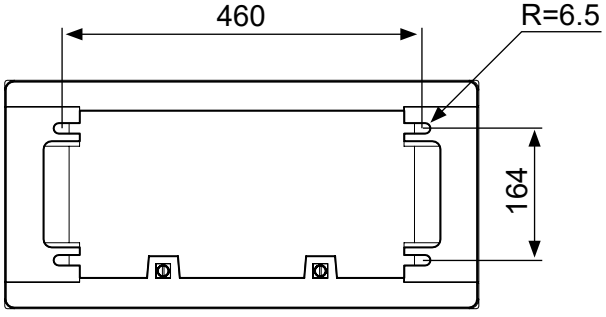

BELDEN
www.belden.com
These products may be protected by one or more patents. For further information, please visit: www.ppc-online.com/patents

Kitzingstr. 1-5, 12277 Berlin, Germany
info@sichert.com
+49 30 74707-0
www.sichert.com

Technical data

Dimensions	
W x H x D cabinet and plinth	594 x 2057 x 310 mm
Weight	
Cabinet complete	n/a
Plinth	18.3 kg
Material	
Cabinet and plinth	Glass-reinforced Polycarbonate (PC-GF5)
Degree of protection	IP 54
Resistance	Weather-resistant Self-extinguishing 100% recyclable polymer
Color	Water-based top coat with color similar to RAL 7038
Cabinet version	UNI 6/998/310 Ribbed surface against billposting Door with swivel handle for lock cylinder (according to DIN 18252)

3 Scope of supply

3.1 Standard version

System overview

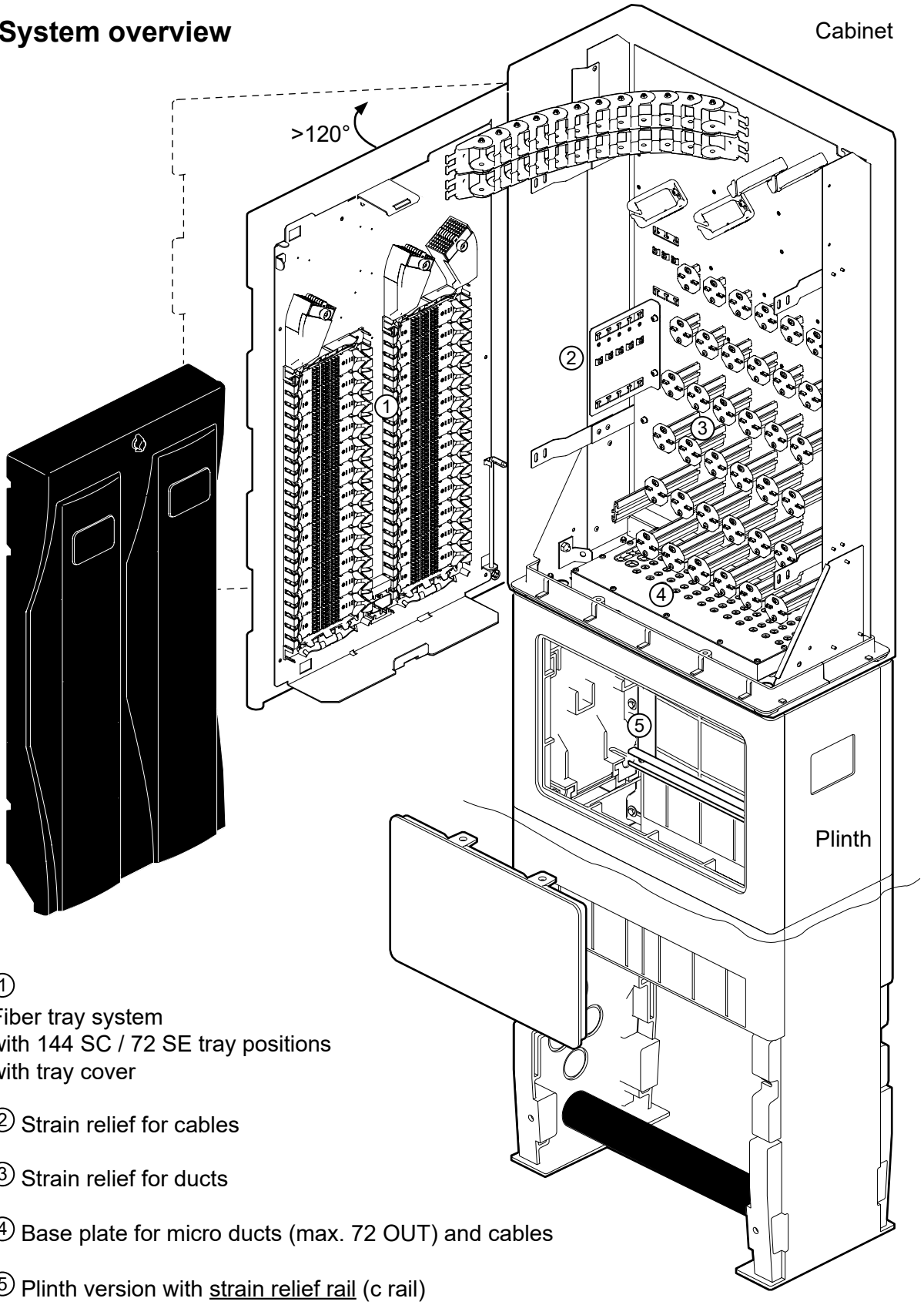

① Fiber tray system
with 144 SC / 72 SE tray positions
with tray cover

② Strain relief for cables

③ Strain relief for ducts

④ Base plate for micro ducts (max. 72 OUT) and cables

⑤ Plinth version with strain relief rail (c rail)

BELDEN
www.belden.com
These products may be protected by one or more patents. For further information, please visit: www.ppc-online.com/patents

Kitzingstr. 1-5, 12277 Berlin, Germany
info@sichert.com
+49 30 74707-0
www.sichert.com

Key facts and features

The cabinet is designed to protect and manage fiber optic cables for broadband supply in outdoor applications (IP 54). The cabinet is supplied with max. 144 fiber SC splice trays or 72 SE splice trays and a management system to accomodate up to 72 Ø 7 or Ø 10 mm blown duct tubes.

Delivery condition

The cabinet will be delivered preassembled. The plinth is not a delivery component of the cabinet. The cabinet comes with accessory packs for the fiber kit.

Accessories kit

Part		Quantity
		FCC6 72/7-10
Gripper for duct		
Ø 7 mm		84
Ø 10 mm		84
Ø 12 mm		9
Ø 14 mm		9
Ø 16 mm		9
Ø 20 mm		9
Two-sided hook-and-loop tape		4x 150 mm
End plate for clip rail	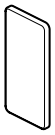	6
Screw for lock cylinder		1
Double locking system:		
Dummy cylinder	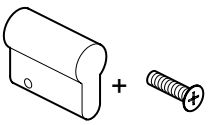	1
Emergency key	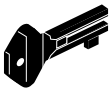	1

3.2 Version with overlength storage

System overview

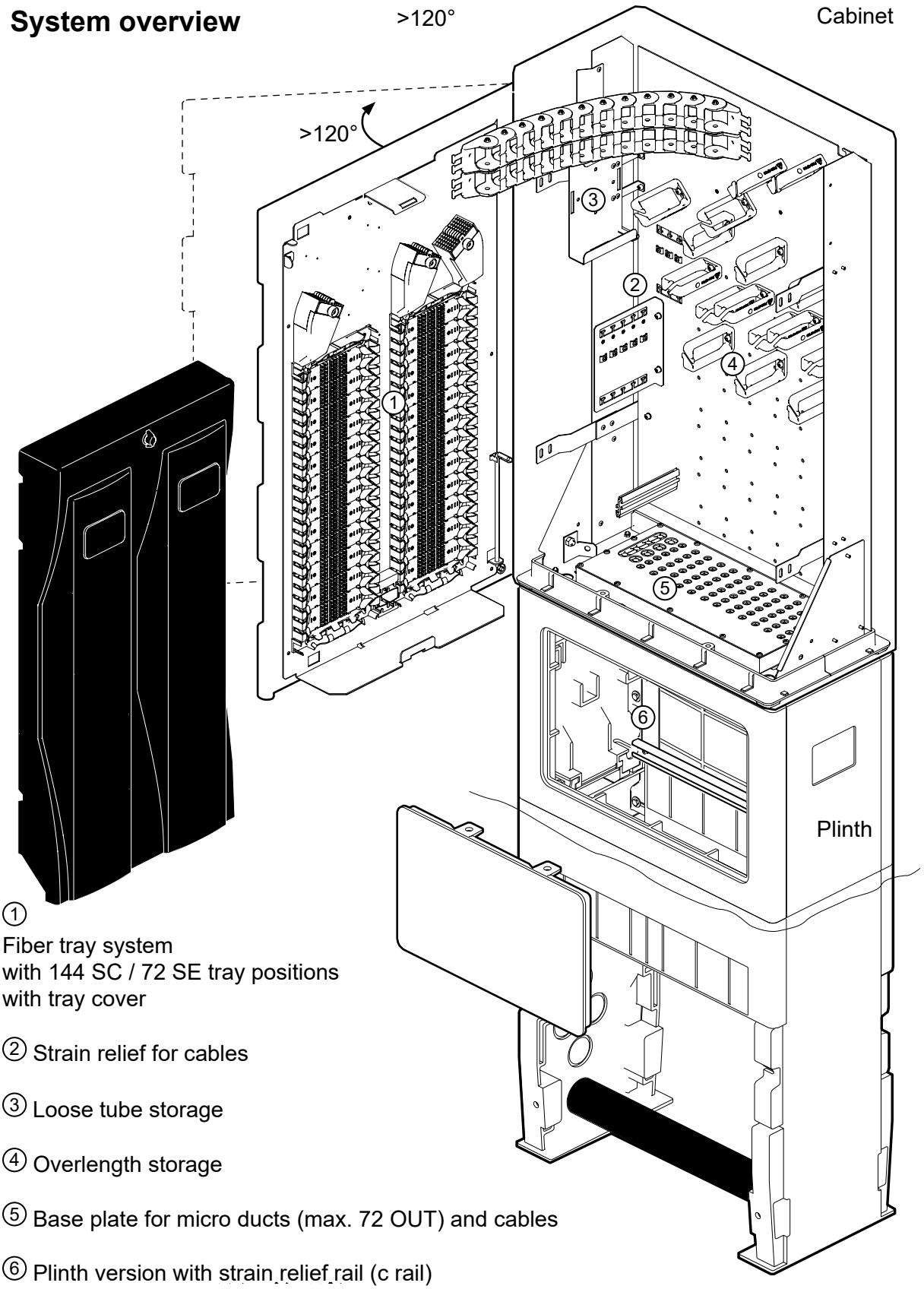

① Fiber tray system
with 144 SC / 72 SE tray positions
with tray cover

② Strain relief for cables

③ Loose tube storage

④ Overlength storage

⑤ Base plate for micro ducts (max. 72 OUT) and cables

⑥ Plinth version with strain relief rail (c rail)

BELDEN
www.belden.com
These products may be protected by one or more patents. For further information, please visit: www.ppc-online.com/patents
Kitzingstr. 1-5, 12277 Berlin, Germany
info@sichert.com
+49 30 74707-0
www.sichert.com

Key facts and features

The cabinet is designed to protect and manage fiber optic cables for broadband supply in outdoor applications (IP 54). The cabinet is supplied with max. 144 fiber SC splice trays or 72 SE splice trays and a management system to accomodate up to 72 Ø 7 or Ø 10 mm blown duct tubes.

Delivery condition

The cabinet will be delivered preassembled. The plinth is not a delivery component of the cabinet. The cabinet comes with accessory packs for the fiber kit.

Accessories kit

Part		Quantity
		FCC6 72/7-10 OL
Gripper for duct (base plate)	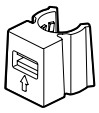	
Ø 7 mm		84
Ø 10 mm		84
Gripper for duct (clip rail)		
Ø 12 mm		9
Ø 14 mm		9
Ø 16 mm		9
Ø 20 mm		9
Two-sided hook-and-loop tape		8x 150 mm
End plate for clip rail	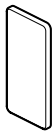	6
Screw for lock cylinder		1
Double locking system:		
Dummy cylinder	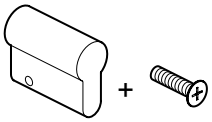	1
Emergency key	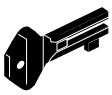	1

Important notes

- Keep splice tray holder clean.
- Never use solvents to clean cables, fibers or tray parts.
- Clean fibers before fitting in accordance with manufacturer‘s instructions (e.g. isopropyl alcohol).
- Maintain the specified bending radii.
- Observe the stripping length in the strain relief block.
- Mark the loose tubes and fibers before fitting the fibers.
- Use only the approved tool for cutting open loose tubes.
- Do not cut open micro cables.
- Avoid crossing over loose tubes and fibers in the splice tray holders.
- Place the fibers without tension in the splice tray holder channels, underneath all retention tabs.
- If connected fibers are pulled out of the splice tray holders, push them back in with extreme care.
- Relevant standards and guidelines must be observed.

Specified screw tightening torques

Do not use slip additives, lubricants or cleaners.

Specified screw tightening torques:

Galvanised screws
(strength class 8.8)

Screw size	Tightening torque values (Nm)
M3	1.51
M4	3.3
M5	6.5
M6	11.3
M8	27.3
M10	54

Stainless steel screws
(strength class A2-70)

Screw size	Tightening torque values (Nm)
M3	1.1
M4	2.4
M5	4.9
M6	8.4
M8	20.6
M10	40.7

PT screws for Polycarbonat parts:

Galvanised screws

Screw size	Tightening torque values (Nm)
Ø 5 mm	2.5
Ø 6 mm	3.5

Stainless steel screws

Screw size	Tightening torque values (Nm)
Ø 5 mm	3.3
Ø 6 mm	4.0

BELDEN
www.belden.com
These products may be protected by one or more patents. For further information, please visit: www.ppc-online.com/patents
Kitzingstr. 1-5, 12277 Berlin, Germany
info@sichert.com
+49 30 74707-0
www.sichert.com

5 Installation of cabinet and plinth

Preparations

1 Remove the plinth flap ①.

2x
M8
A2

Push the slot screwdriver (size 4 up to 6) through the grommet and turn screw until it stops.

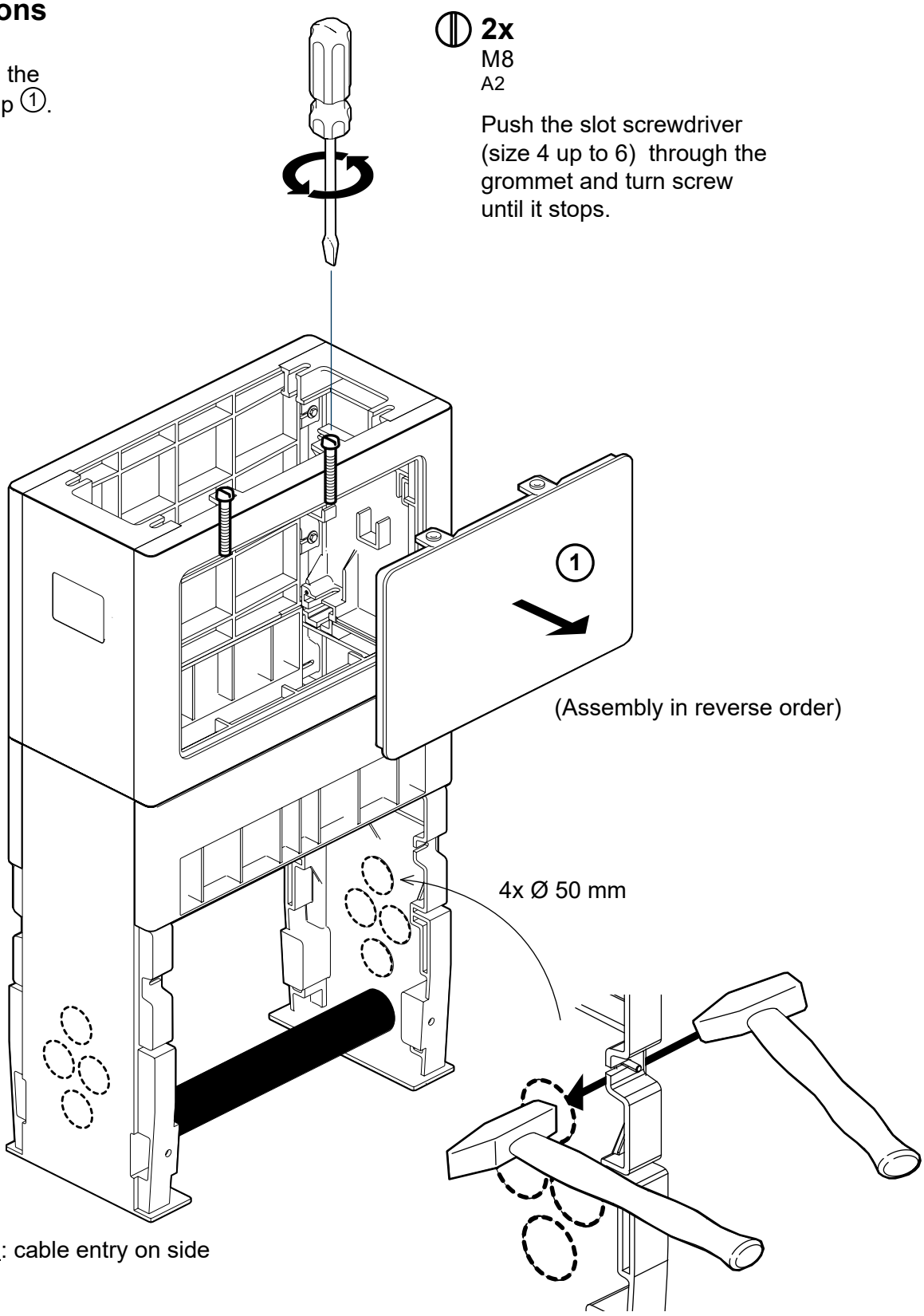

2 Optional: cable entry on side

BELDEN
www.belden.com
These products may be protected by one or more patents. For further information, please visit: www.ppc-online.com/patents

Kitzingstr. 1-5, 12277 Berlin, Germany
info@sichert.com
+49 30 74707-0
www.sichert.com

Installation of the plinth

1 Create excavation entsprechend depending on the installation situation.
Note the installation depth. Level and fix the excavation base ①.

2 Place and align the plinth perpendicular and level in the excavation.
The upper plinth part must be mounted 2+ cm ② above the ground level.

3 Feed the cables, micro ducts and duct bundles trough the plinth.
Install the cables with lengths of 10 m and micro ducts with 2+ m overlengths.

4 Pack down the earth in the excavation. Always fill and compact layer by layer.

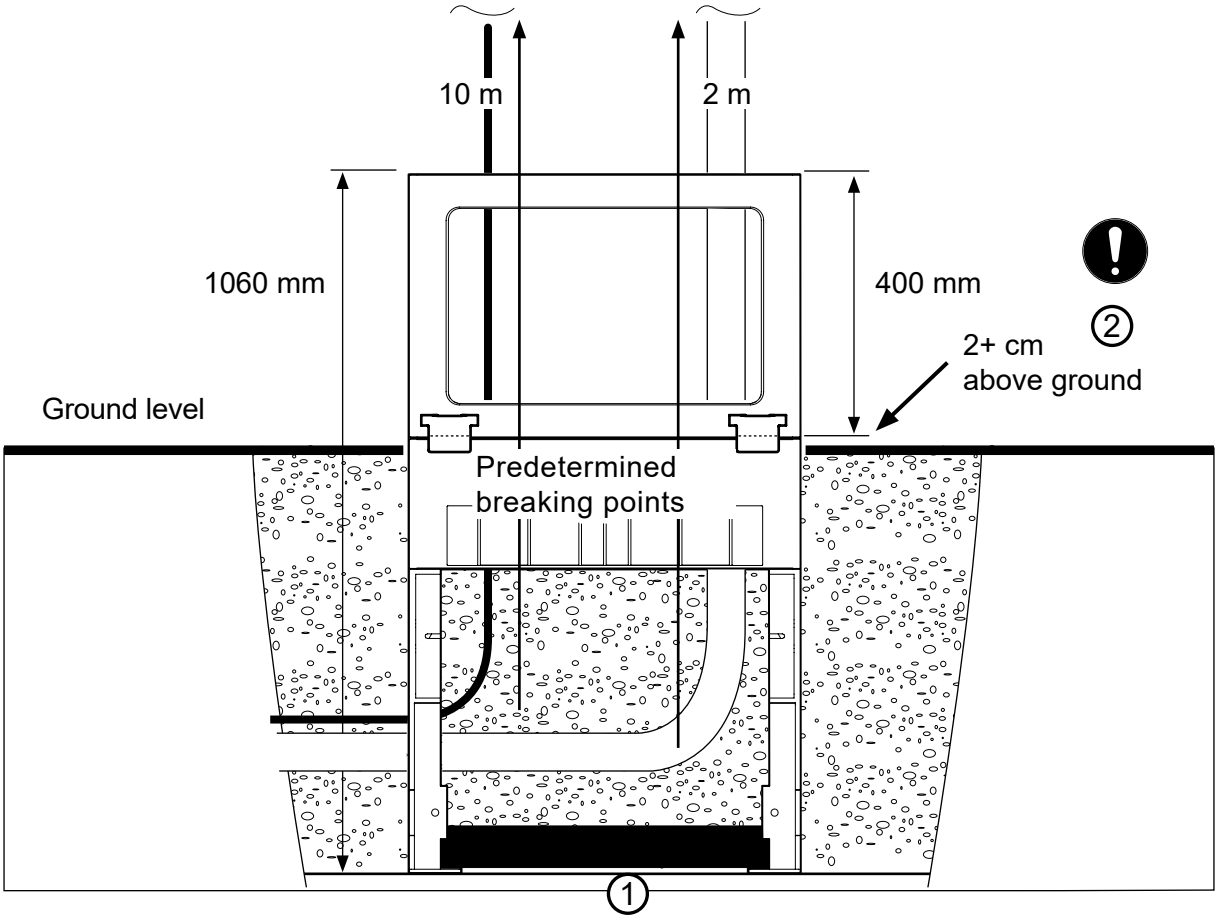

BELDEN
www.belden.com
These products may be protected by one or more patents. For further information, please visit: www.ppc-online.com/patents

Kitzingstr. 1-5, 12277 Berlin, Germany
info@sichert.com
+49 30 74707-0
www.sichert.com

Installation of the cabinet

1 Connect cabinet and plinth with the screw kit (delivered with plinth).

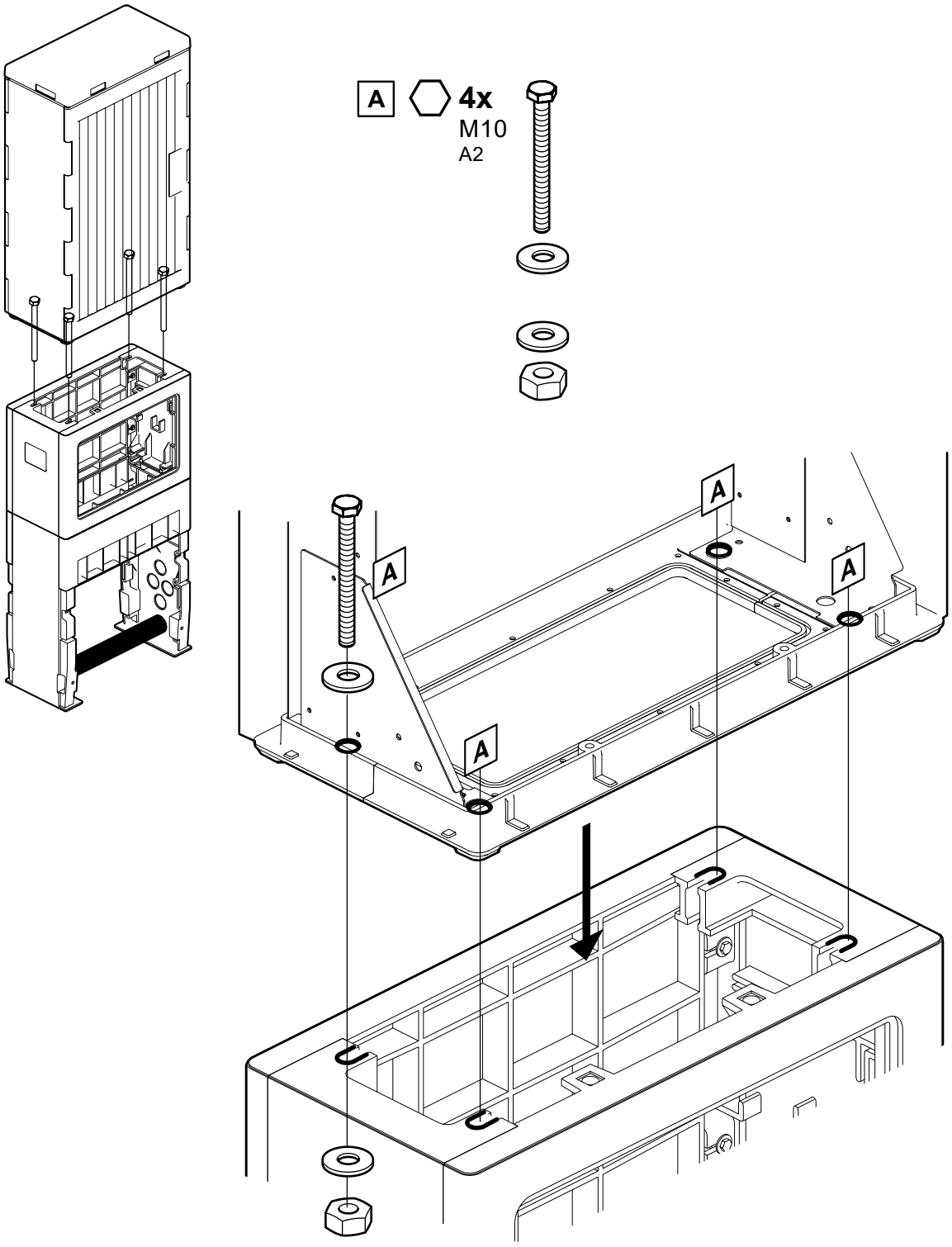

BELDEN
www.belden.com
These products may be protected by one or more patents. For further information, please visit: www.ppc-online.com/patents

Kitzingstr. 1-5, 12277 Berlin, Germany
info@sichert.com
+49 30 74707-0
www.sichert.com

Typical construction phases

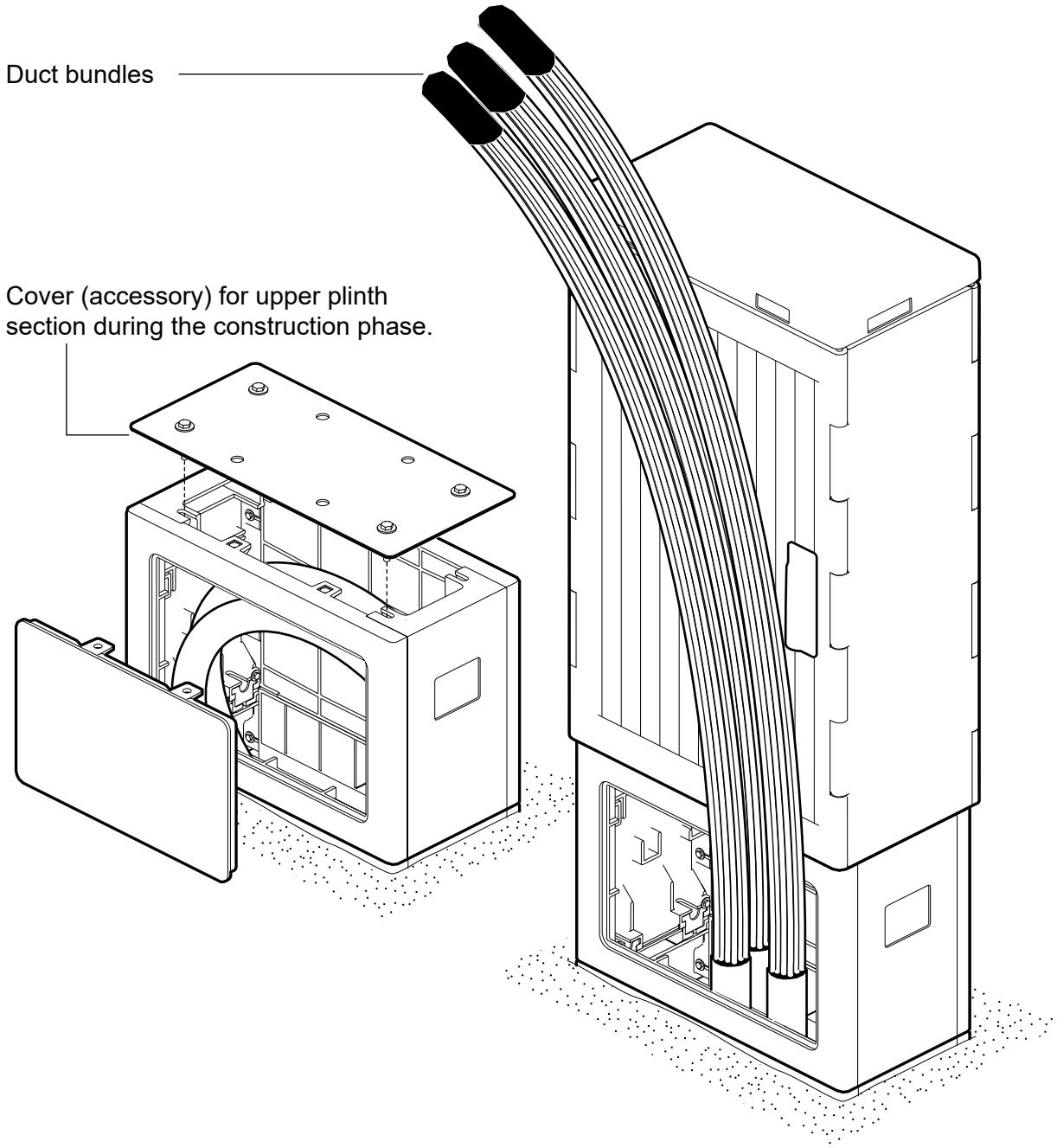

BELDEN
www.belden.com
These products may be protected by one or more patents. For further information, please visit: www.ppc-online.com/patents

Kitzingstr. 1-5, 12277 Berlin, Germany
info@sichert.com
+49 30 74707-0
www.sichert.com

6 Locking system

Swivel handle double locking mechanism

Setting of lock cylinder (according to DIN 18252)

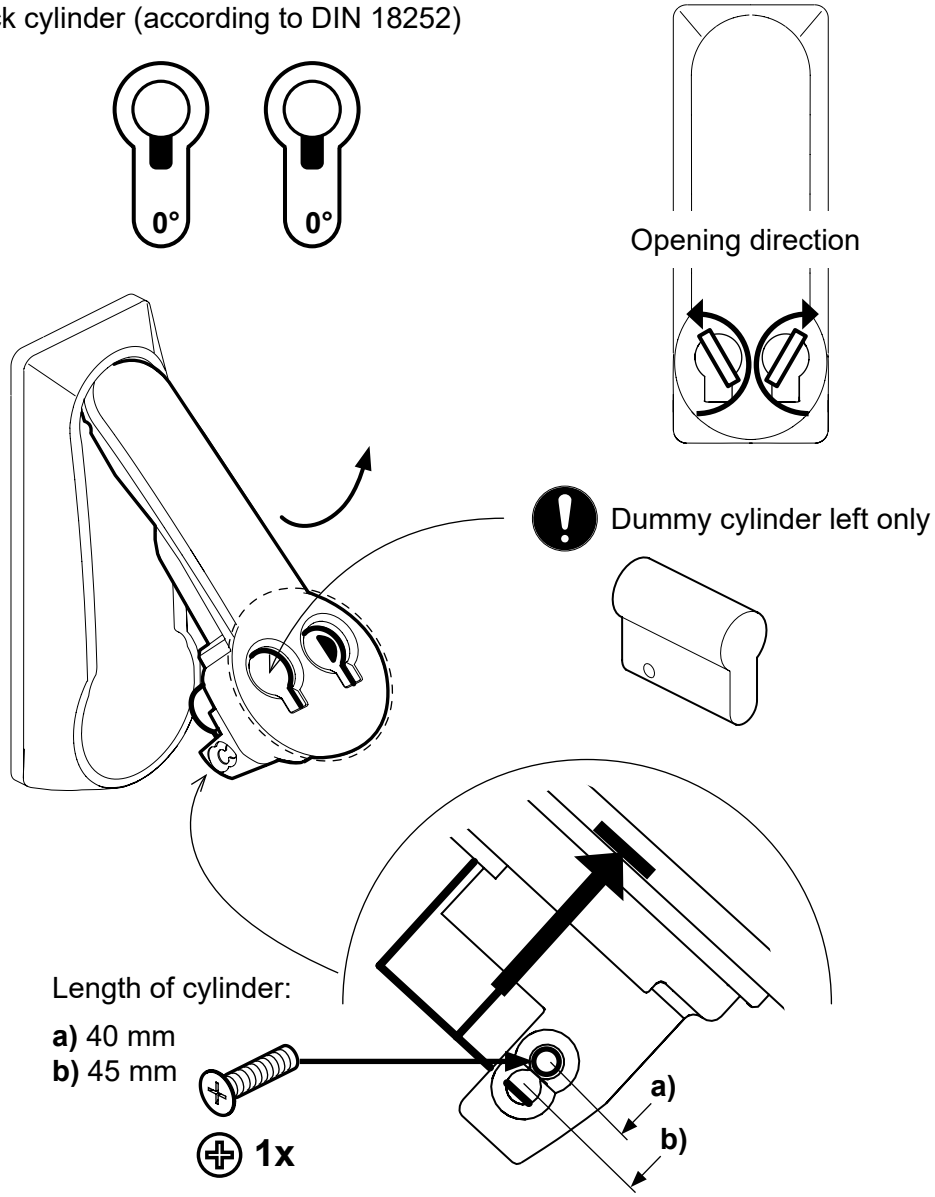

Use the supplied screw only!

Observe locking system manufacturer‘s notes.

SCAN OR CLICK

7 Concept of routing

7.1 Standard version

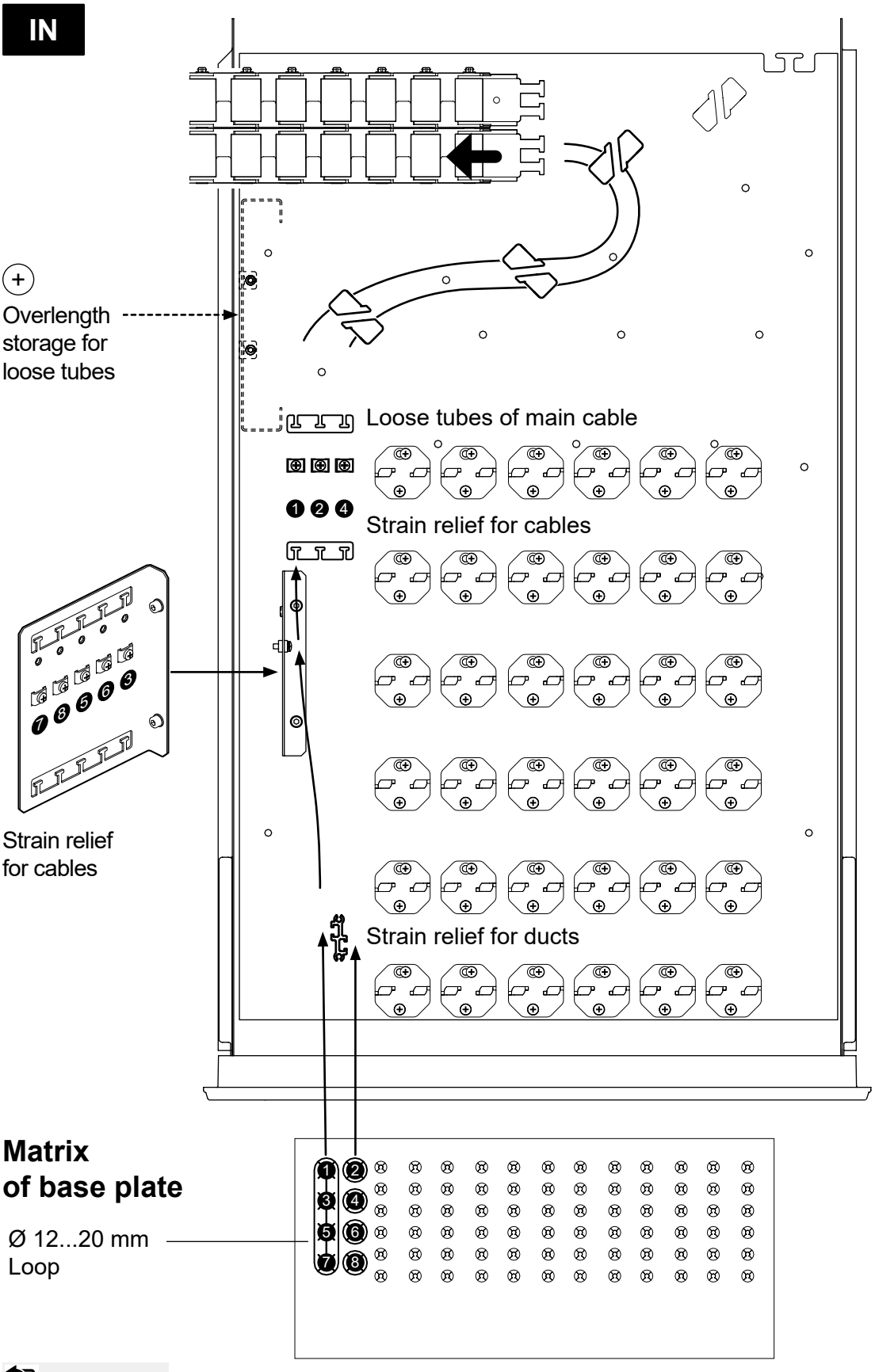

BELDEN
www.belden.com
These products may be protected by one or more patents. For further information, please visit: www.ppc-online.com/patents

Kitzingstr. 1-5, 12277 Berlin, Germany
info@sichert.com
+49 30 74707-0
www.sichert.com

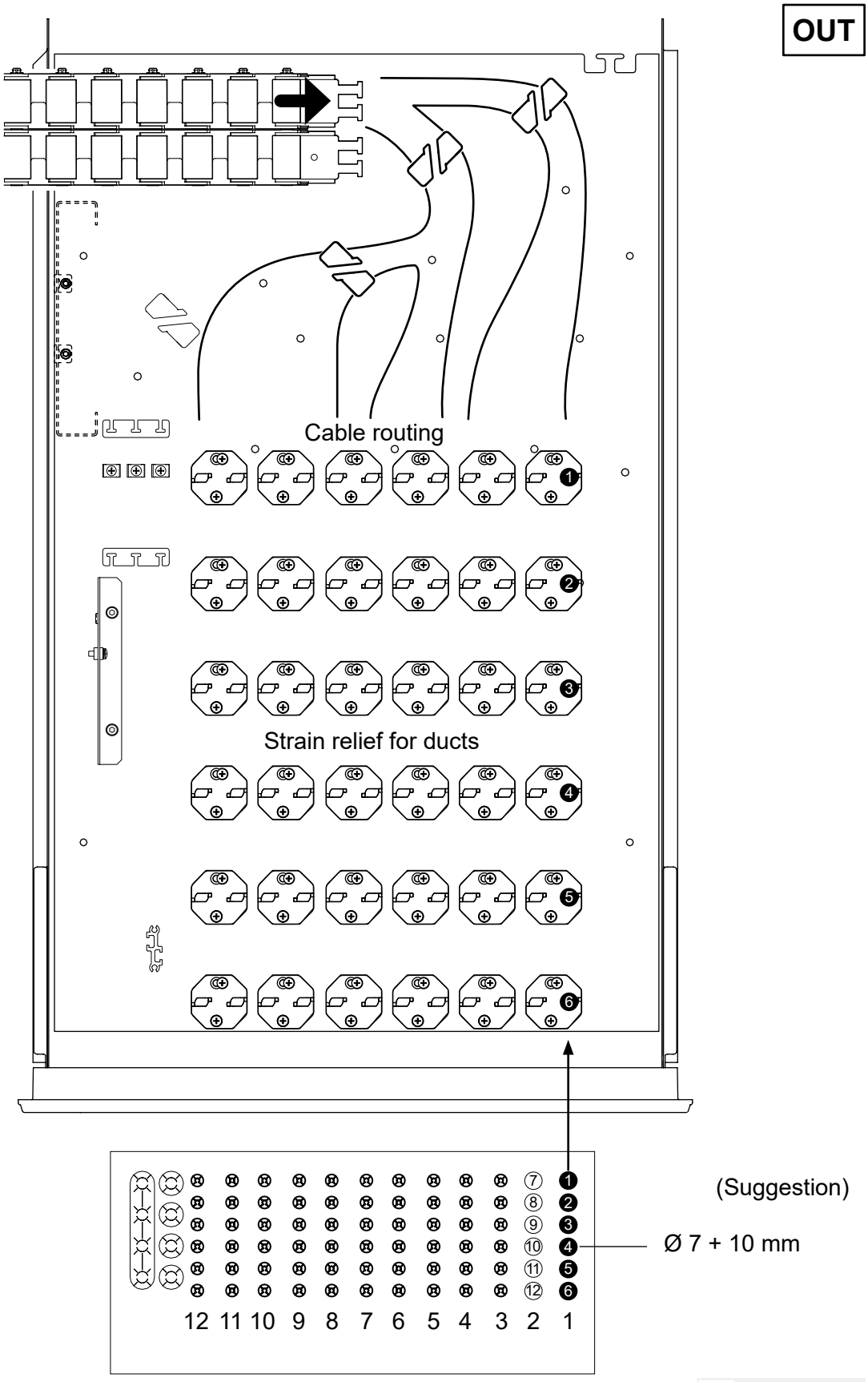

Previous
Contents

7.2 Version with overlength storage

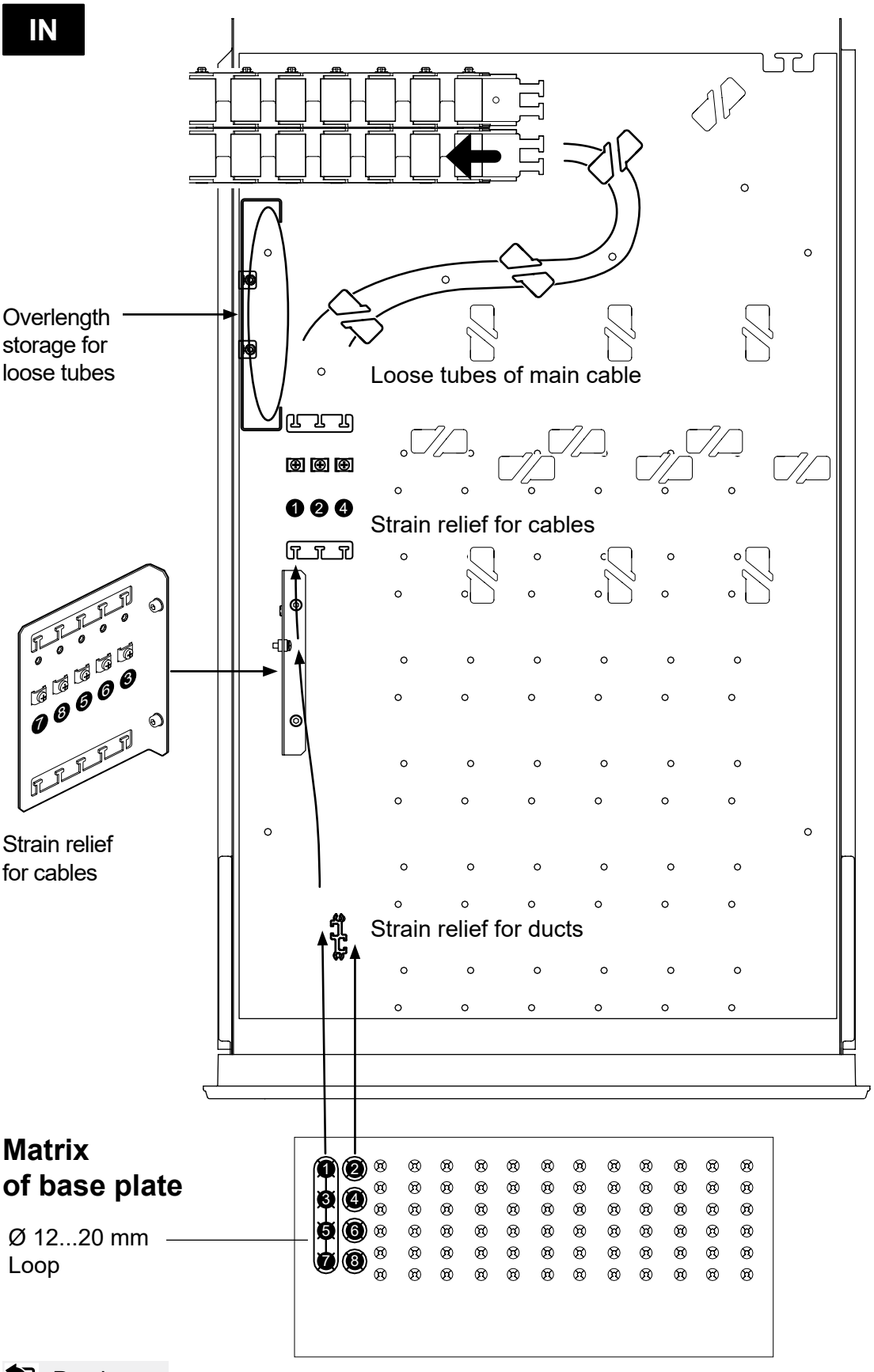

BELDEN
www.belden.com
These products may be protected by one or more patents. For further information, please visit: www.ppc-online.com/patents
Kitzingstr. 1-5, 12277 Berlin, Germany
info@sichert.com
+49 30 74707-0
www.sichert.com

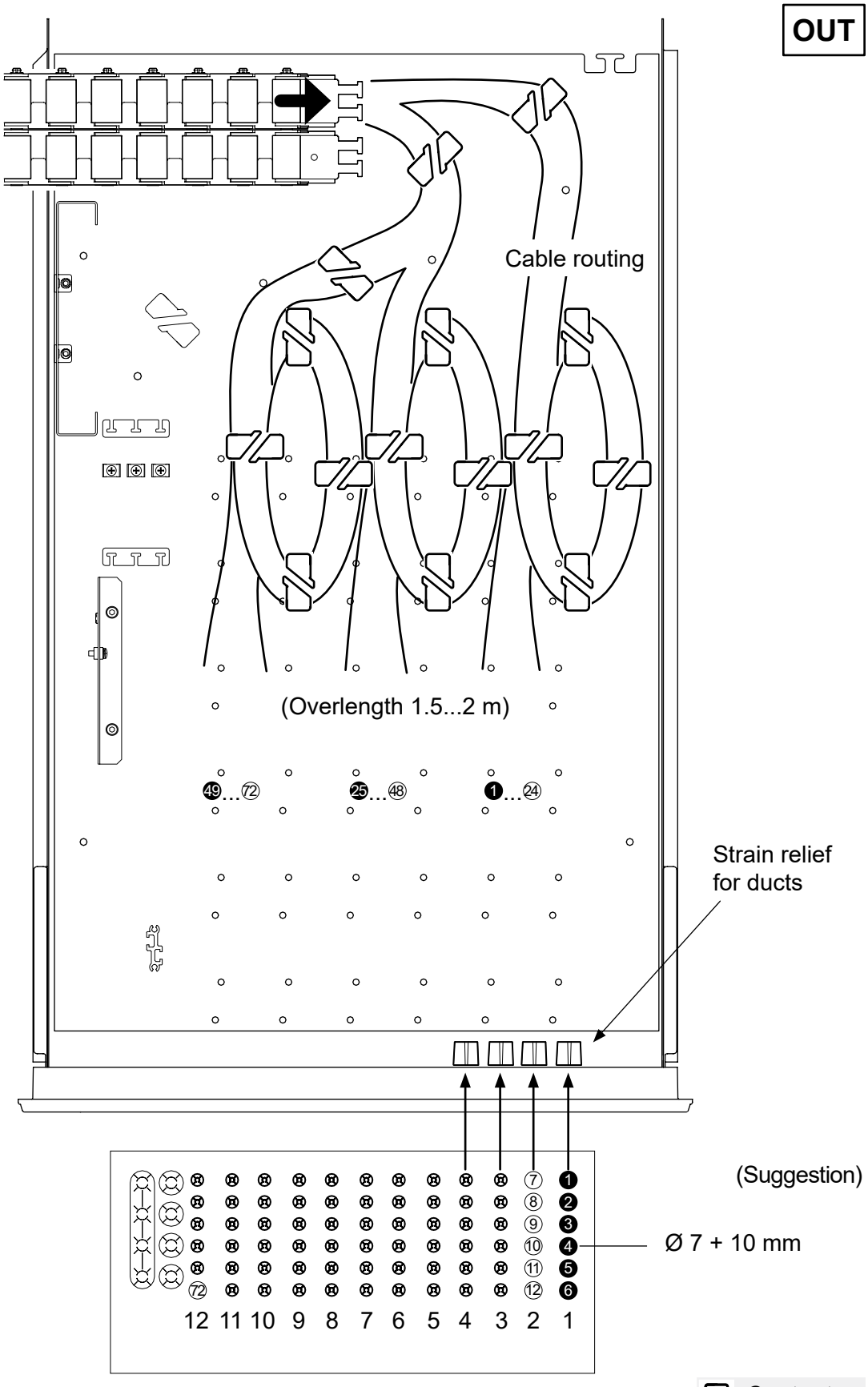

Previous
Contents

These products may be protected by one or more patents. For further information, please visit: www.ppc-online.com/patents
Kitzingstr. 1-5, 12277 Berlin, Germany
info@sichert.com
+49 30 74707-0

8 Installation of main cable

8.1 Loose tube cable (non-metallic armoured)

Fasten the cable

For direct buried cable see page 24.

1 Fed cable from below through the base plate.

2 Strip the cable Ⓒ in accordance with the manufacturer‘s instructions.

3 Straighten the loose tubes.

4 Install the strength member to strain relief Ⓢ.

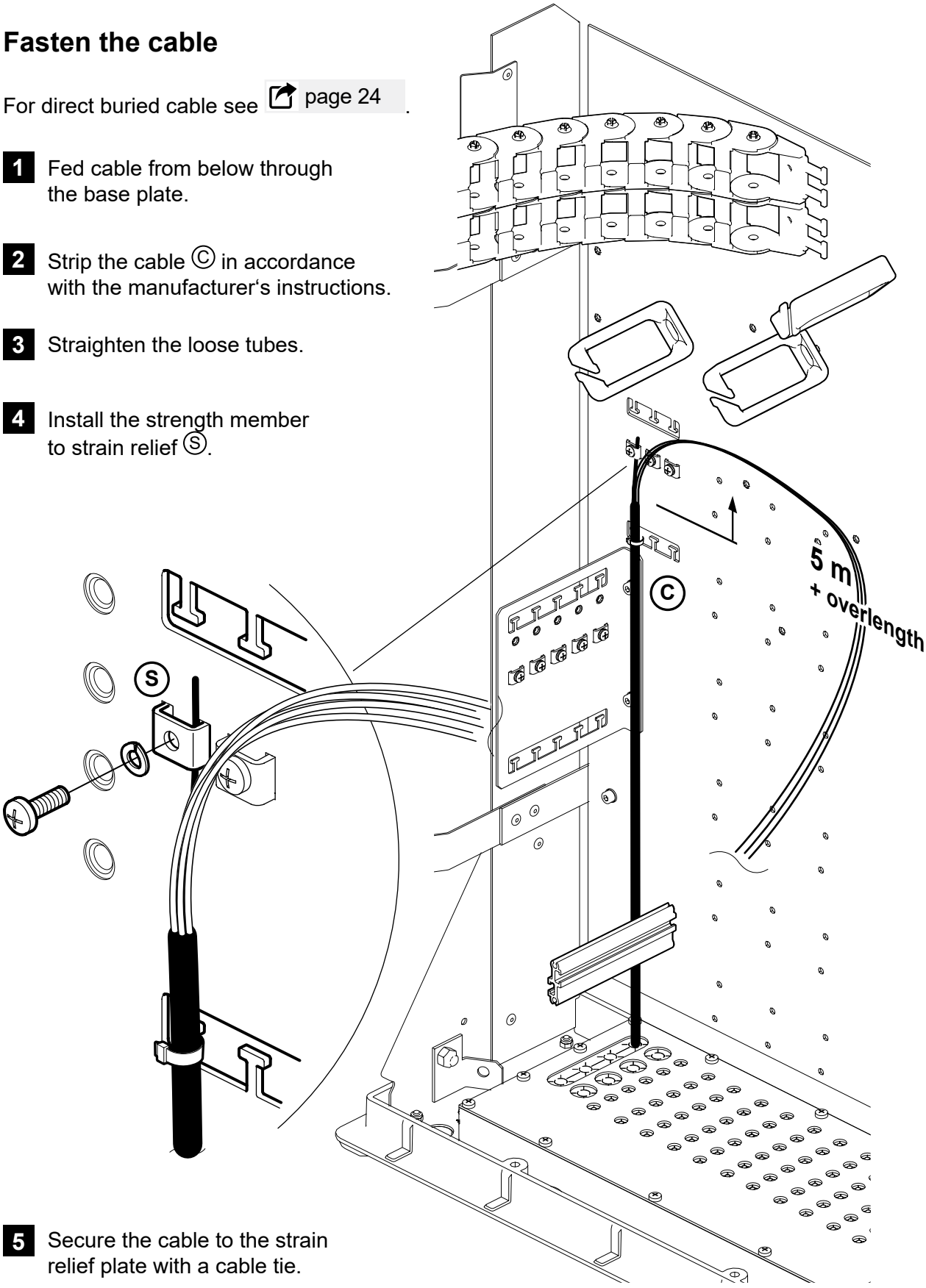

5 Secure the cable to the strain relief plate with a cable tie.

Previous Contents

Overlength storage for loose tubes / loop

(Included in version for overlength storage)

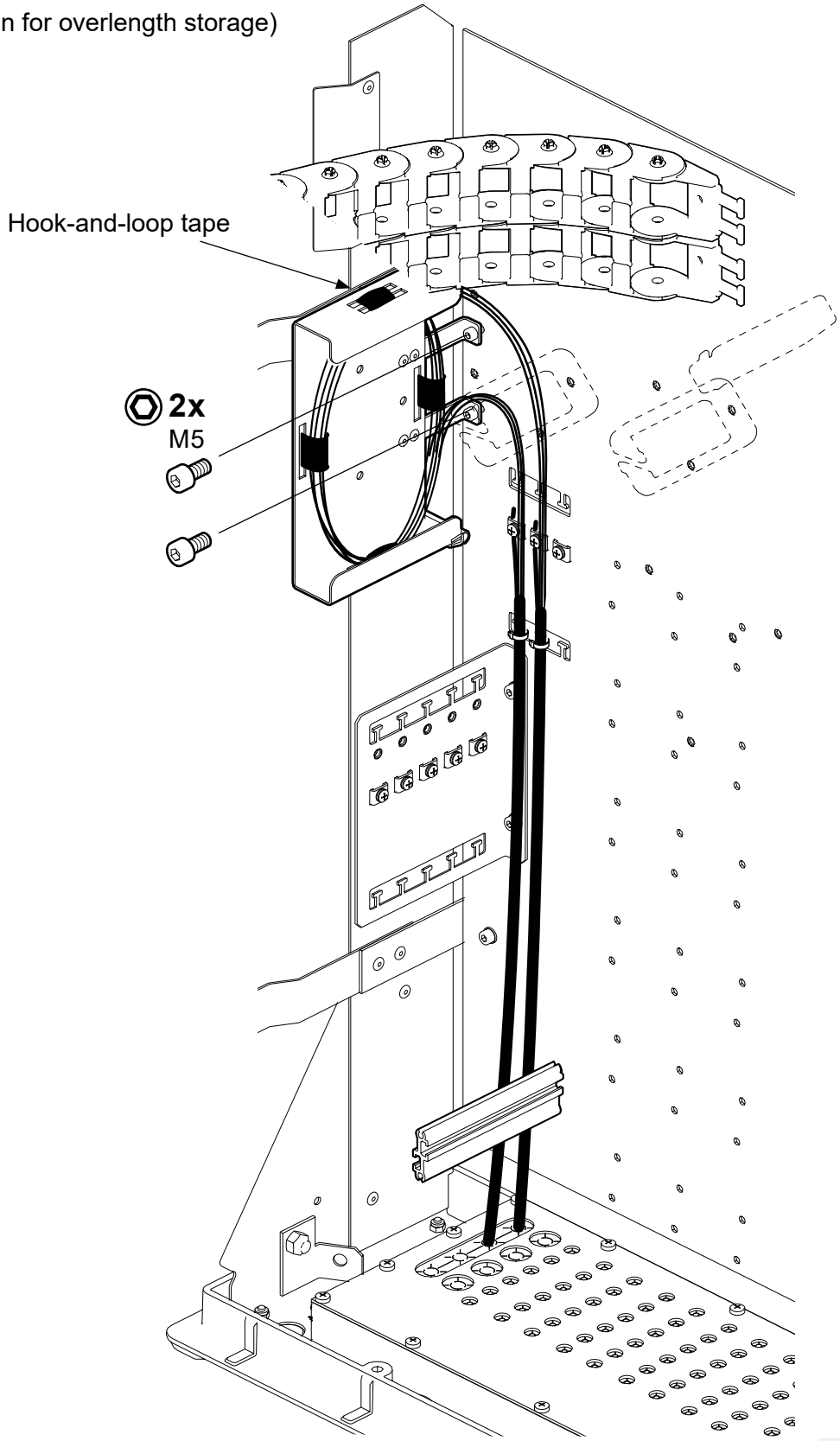

BELDEN
www.belden.com
These products may be protected by one or more patents. For further information, please visit: www.ppc-online.com/patents

Kitzingstr. 1-5, 12277 Berlin, Germany
info@sichert.com
+49 30 74707-0
www.sichert.com

Routing of loose tubes

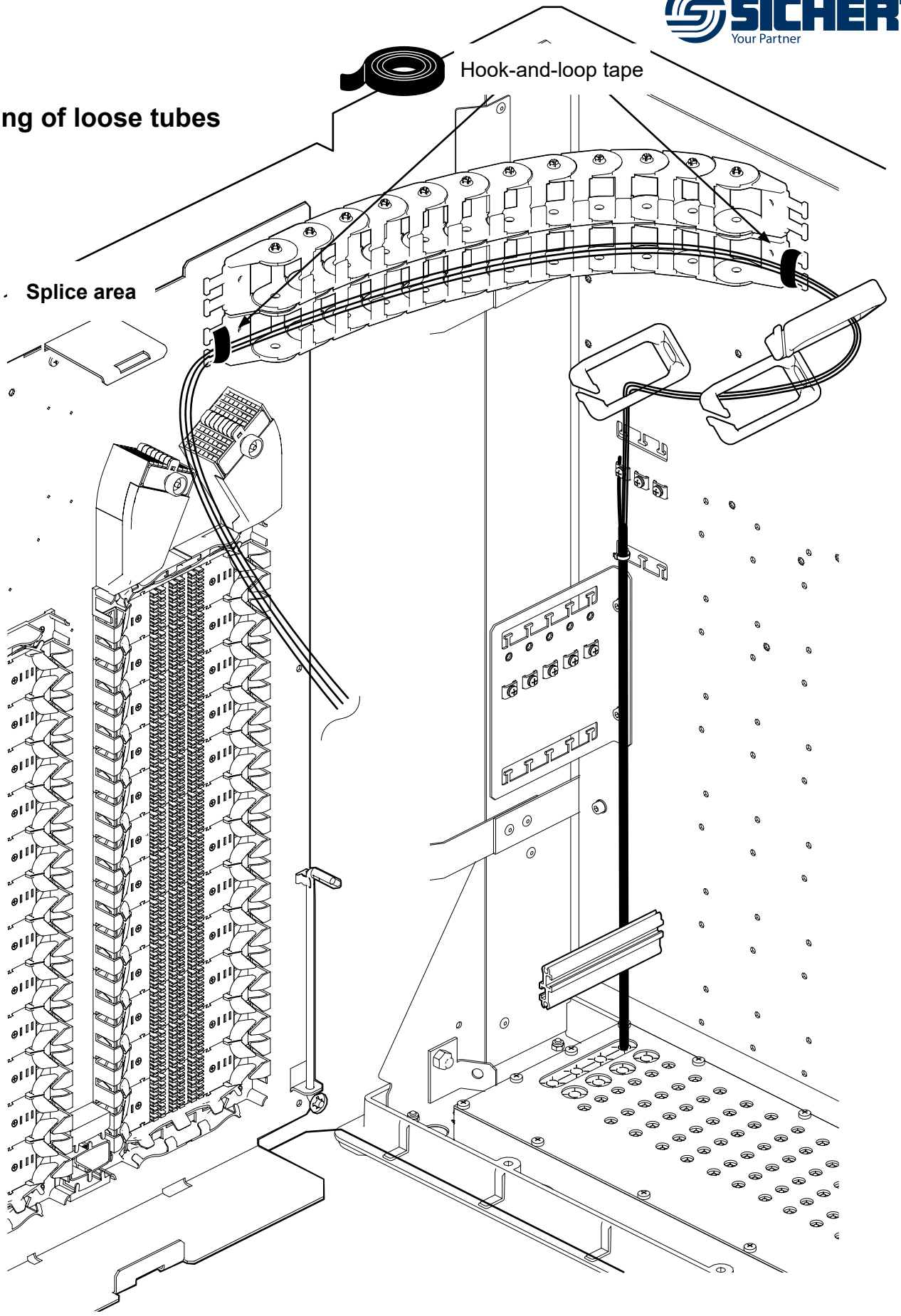

BELDEN
www.belden.com
These products may be protected by one or more patents. For further information, please visit: www.ppc-online.com/patents

Kitzingstr. 1-5, 12277 Berlin, Germany
info@sichert.com
+49 30 74707-0
www.sichert.com

Fasten the loose tubes

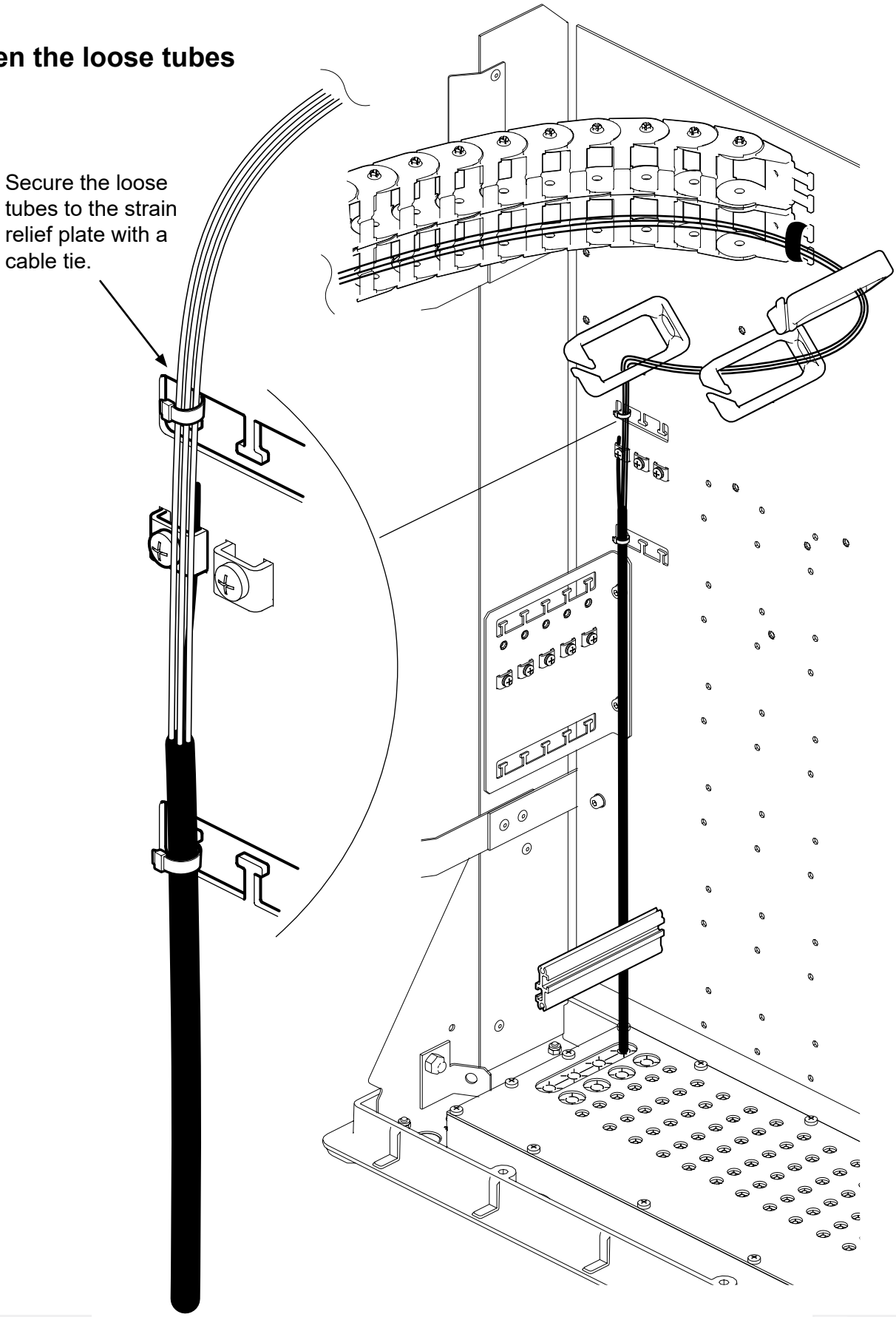

BELDEN
www.belden.com
These products may be protected by one or more patents. For further information, please visit: www.ppc-online.com/patents
Kitzingstr. 1-5, 12277 Berlin, Germany
info@sichert.com
+49 30 74707-0
www.sichert.com

Special case: Grounding of buried cable

Install the grounding kit Ⓖ (accessory) in accordance with the manufacturer‘s instructions before fasten the cable.

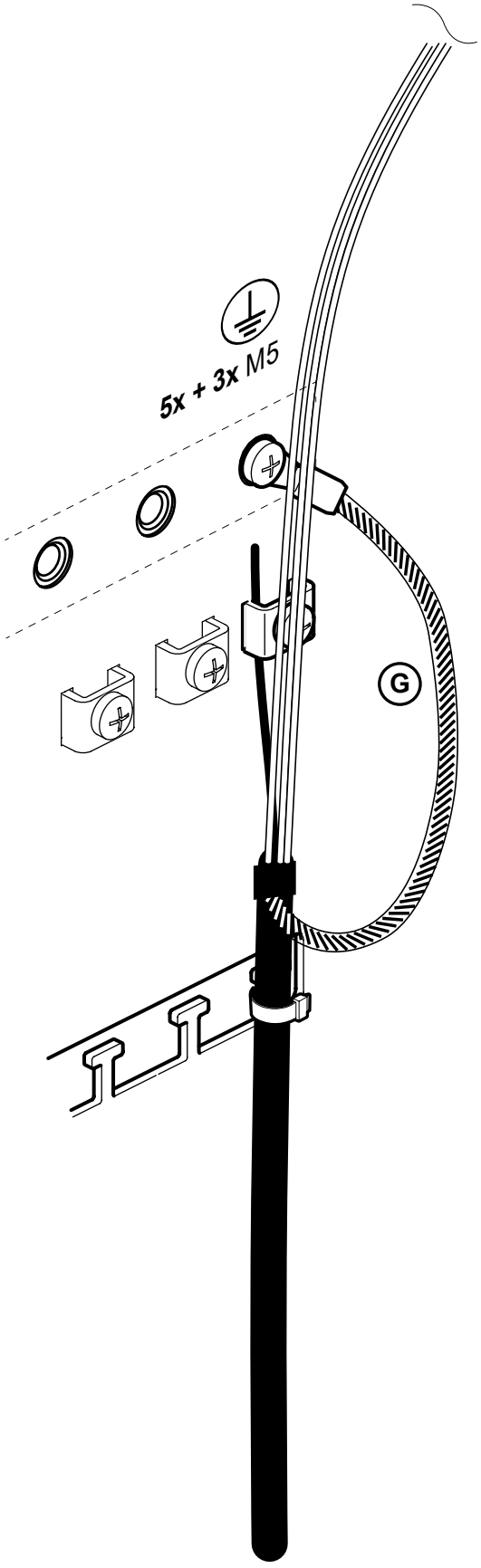

Upgrade kit: Ground rod holder

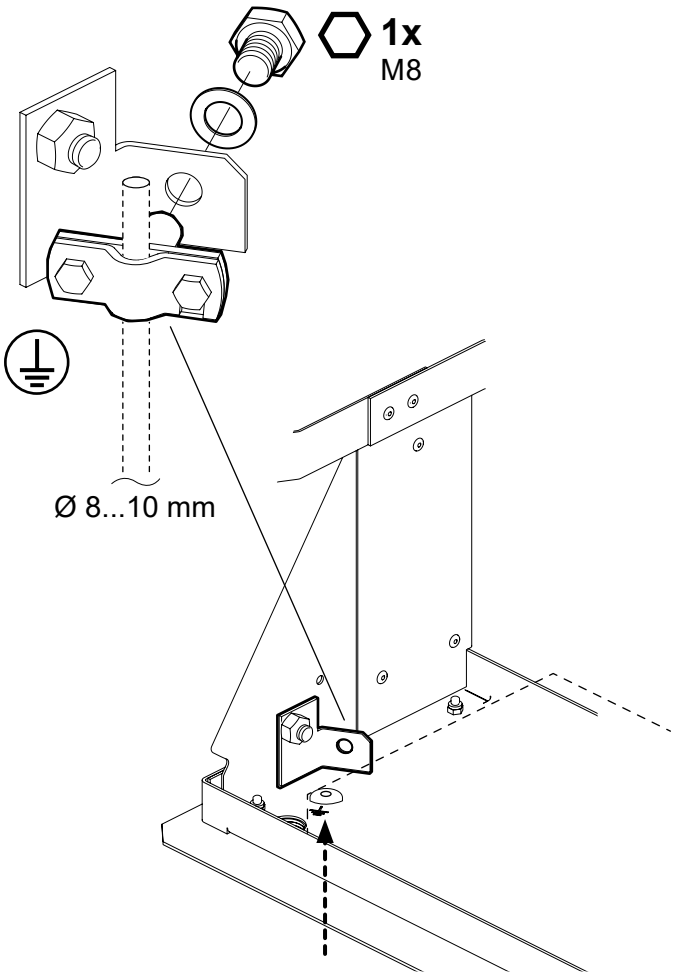

BELDEN
www.belden.com
These products may be protected by one or more patents. For further information, please visit: www.ppc-online.com/patents

Kitzingstr. 1-5, 12277 Berlin, Germany
info@sichert.com
+49 30 74707-0
www.sichert.com

8.2 Micro duct with cable

Installation of duct

1 Fed the duct from below through the base plate.

2 Insert gripper into the gripper plate and trim the duct above.

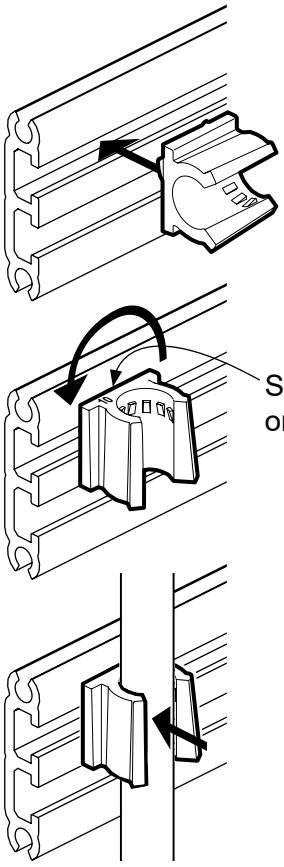

Size of gripper on the top.

3 Place the end plate Ⓔ after mounting all the grippers.

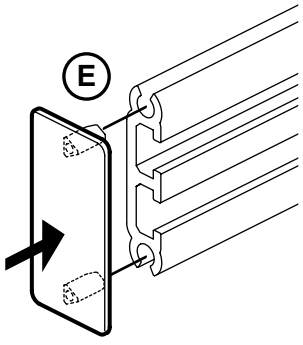

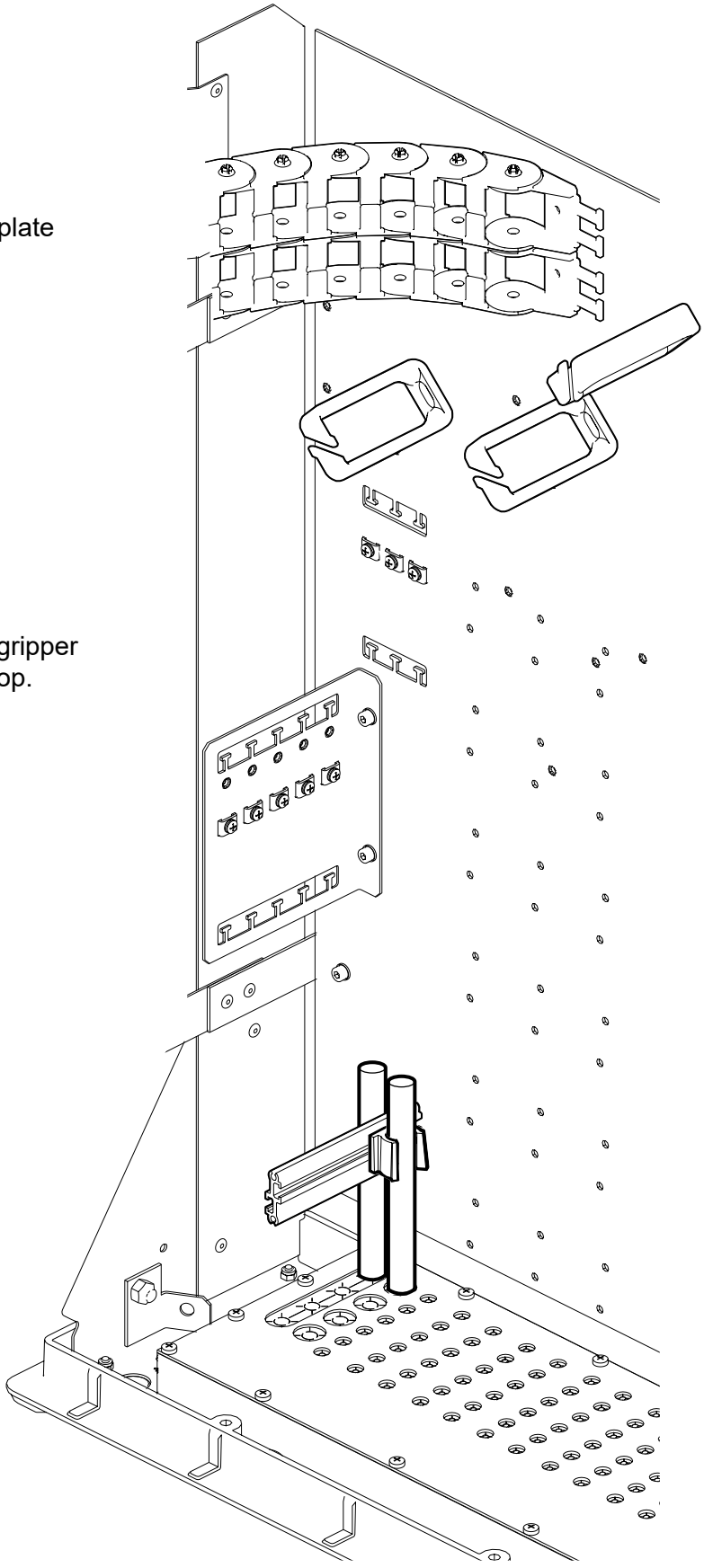

BELDEN
www.belden.com
These products may be protected by one or more patents. For further information, please visit: www.ppc-online.com/patents

Kitzingstr. 1-5, 12277 Berlin, Germany
info@sichert.com
+49 30 74707-0
www.sichert.com

4 Close an unused duct with an end cap ⑤ (accessory) in accordance with the manufacturer‘s instructions.

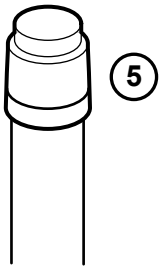

Installation of cable

Feed the cable through the duct and install a gas-water-blocker Ⓖ (accessory) in accordance with the manufacturer‘s instructions.

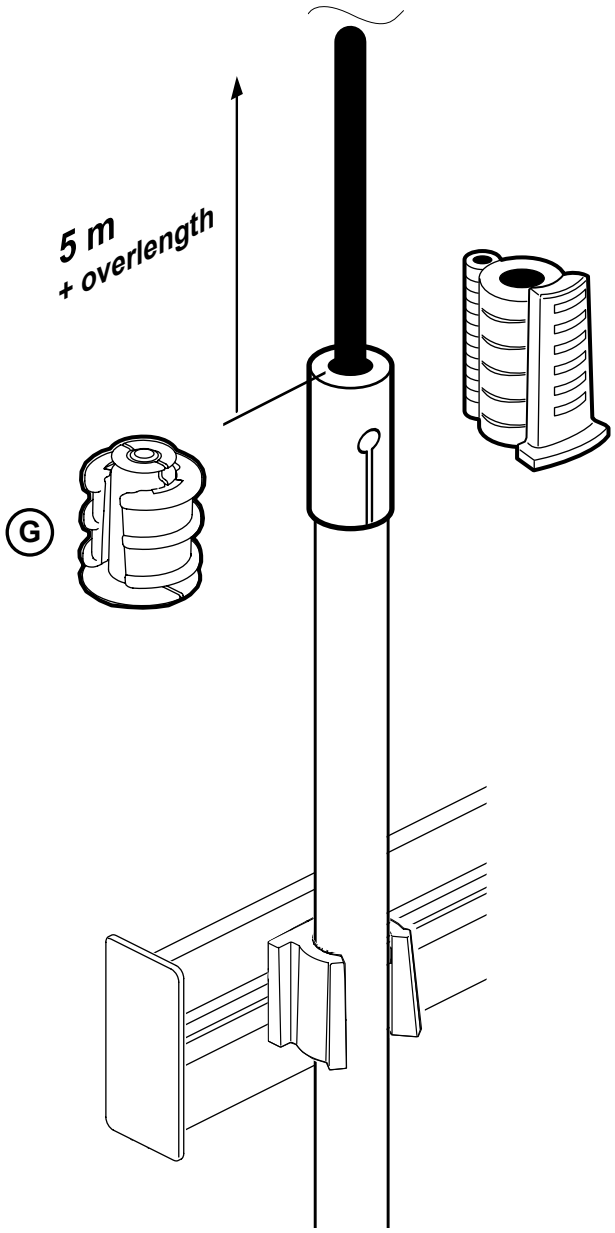

Cable fixing and routing:
see page page 20 et sqq.

BELDEN
www.belden.com
These products may be protected by one or more patents. For further information, please visit: www.ppc-online.com/patents

Kitzingstr. 1-5, 12277 Berlin, Germany
info@sichert.com
+49 30 74707-0
www.sichert.com

9 Installation of outbound cables
(micro cables)

Installation of duct bundle

Cut the duct bundle in cabinet height and open down to the plinth Ⓐ.

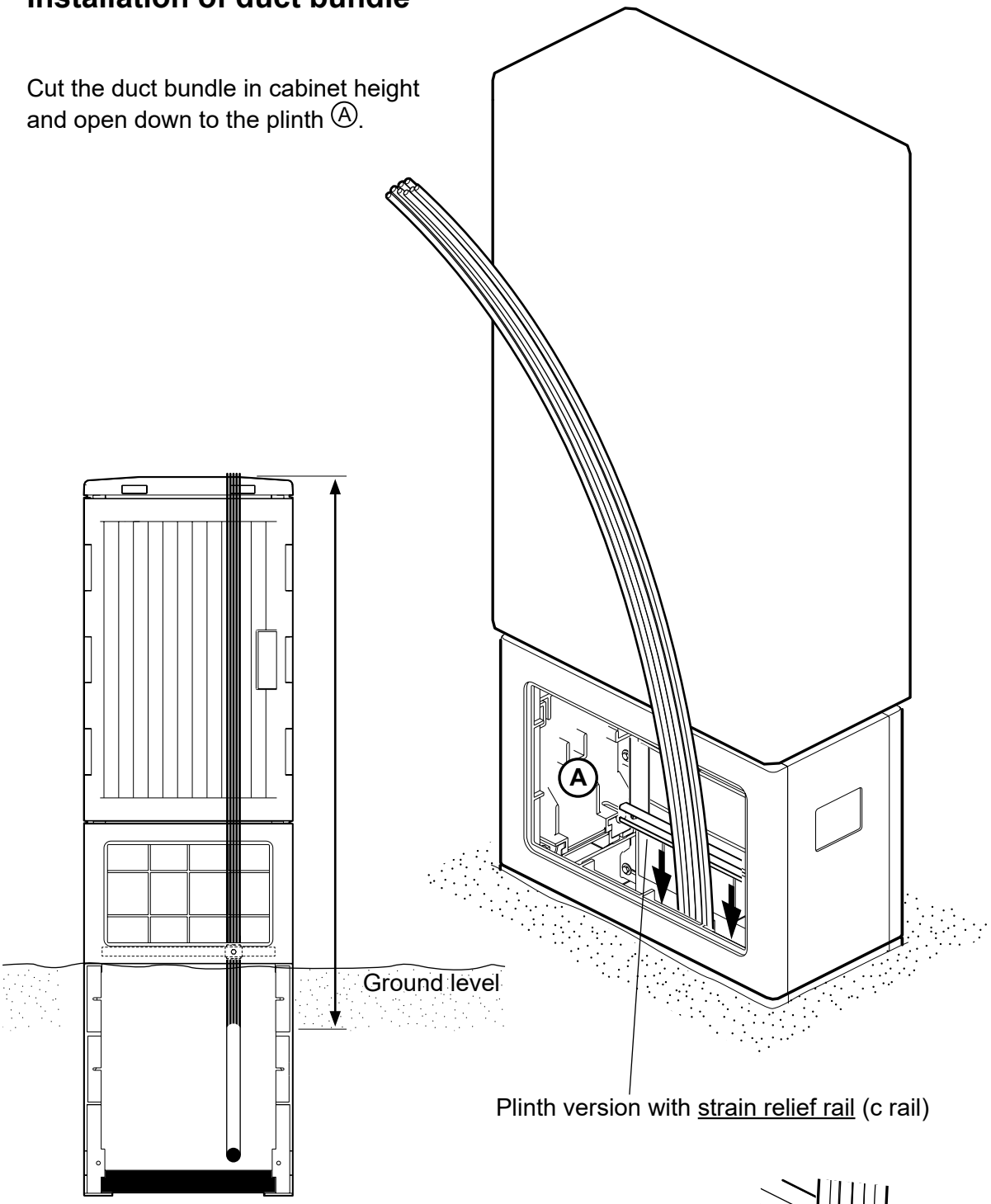

Note the installation instructions for the plinth.

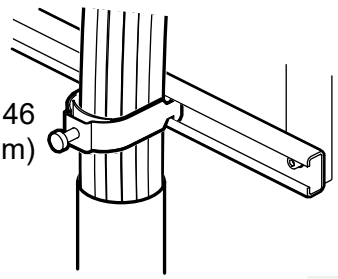

BELDEN
www.belden.com
These products may be protected by one or more patents. For further information, please visit: www.ppc-online.com/patents
Kitzingstr. 1-5, 12277 Berlin, Germany
info@sichert.com
+49 30 74707-0
www.sichert.com

9.1 Standard version

Installation of duct and cable

1 Fed the duct from below through the base plate.

2 Insert gripper into the gripper plate and trim the duct above.

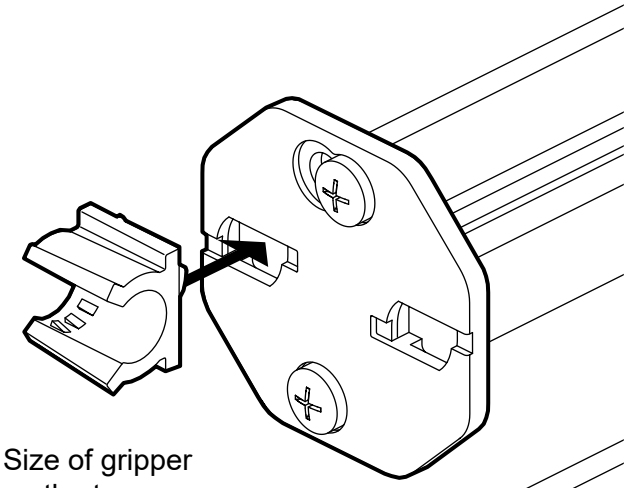

Size of gripper on the top.

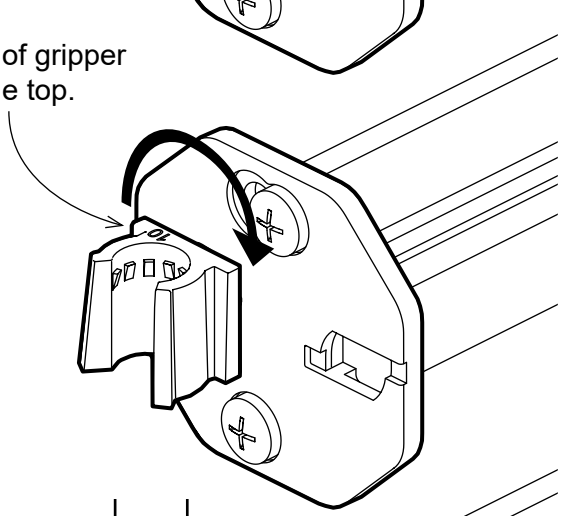

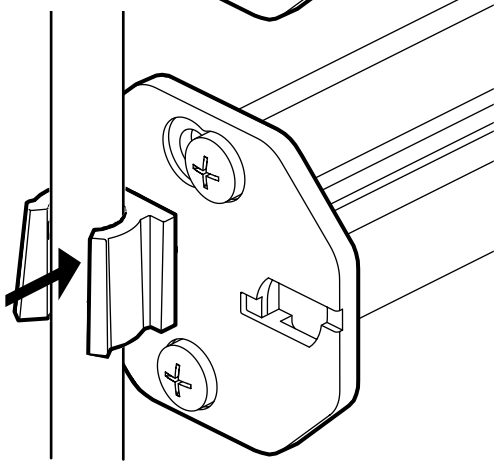

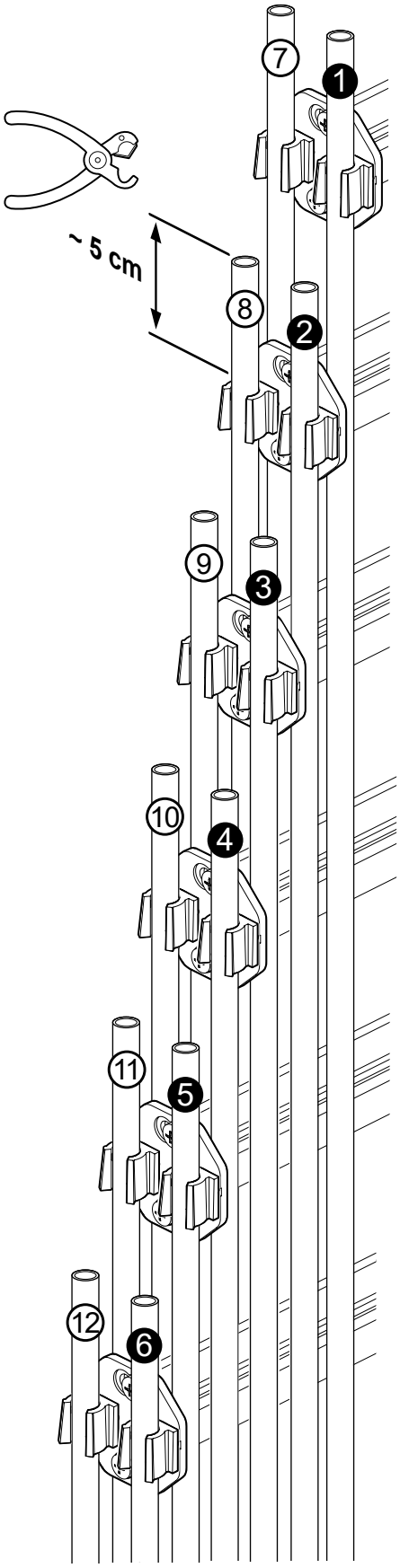

BELDEN
www.belden.com
These products may be protected by one or more patents. For further information, please visit: www.ppc-online.com/patents
Kitzingstr. 1-5, 12277 Berlin, Germany
info@sichert.com
+49 30 74707-0
www.sichert.com

Routing of cables

See page 17 .

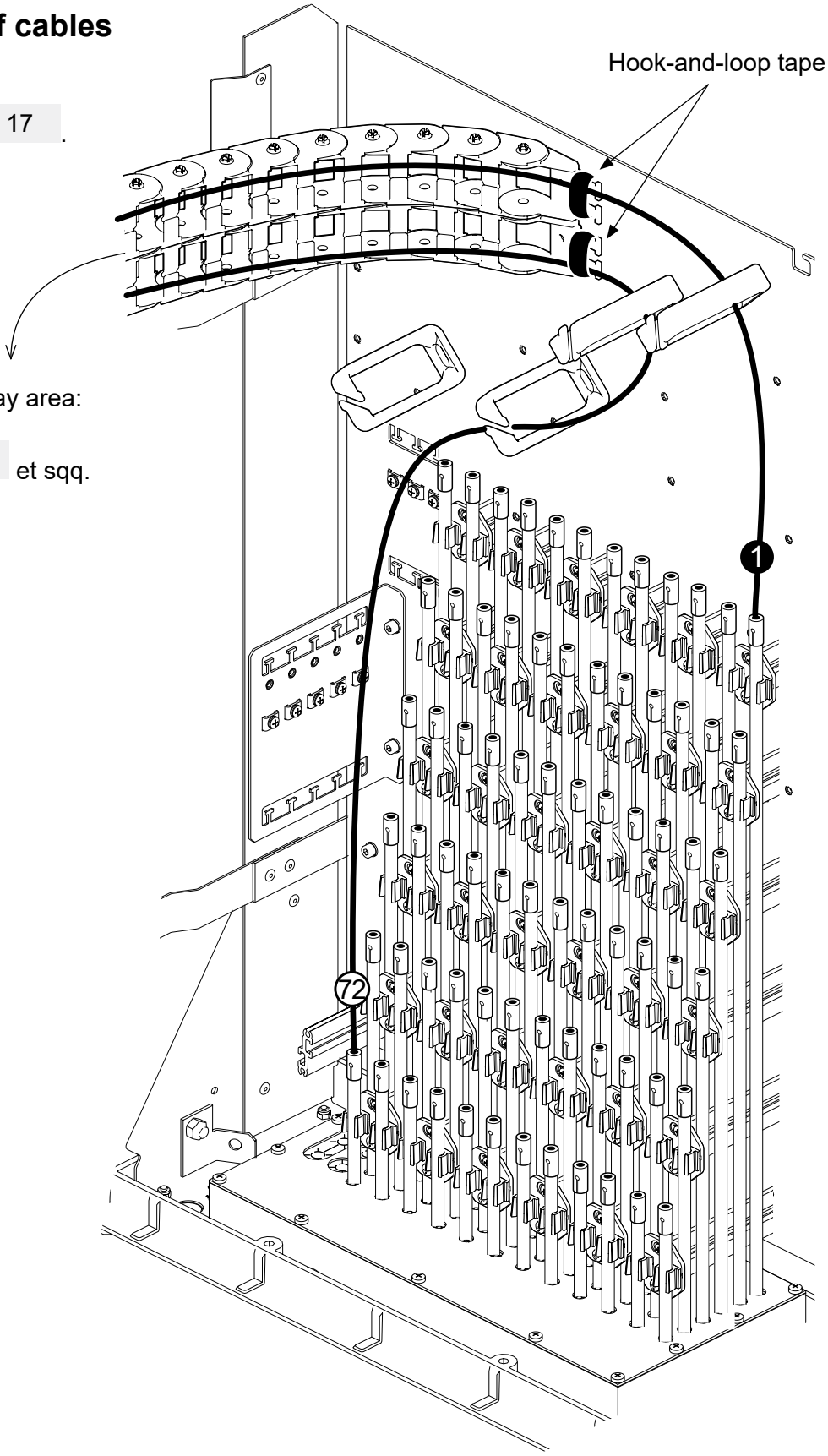

To the fiber tray area:

page 32 et sqq.

BELDEN
www.belden.com
These products may be protected by one or more patents. For further information, please visit: www.ppc-online.com/patents

Kitzingstr. 1-5, 12277 Berlin, Germany
info@sichert.com
+49 30 74707-0
www.sichert.com

9.2 Version with overlength storage

Installation of duct and cable

1 Fed the duct from below through the base plate.

2 Snap the gripper to the duct directly on the base plate and trim the duct above.

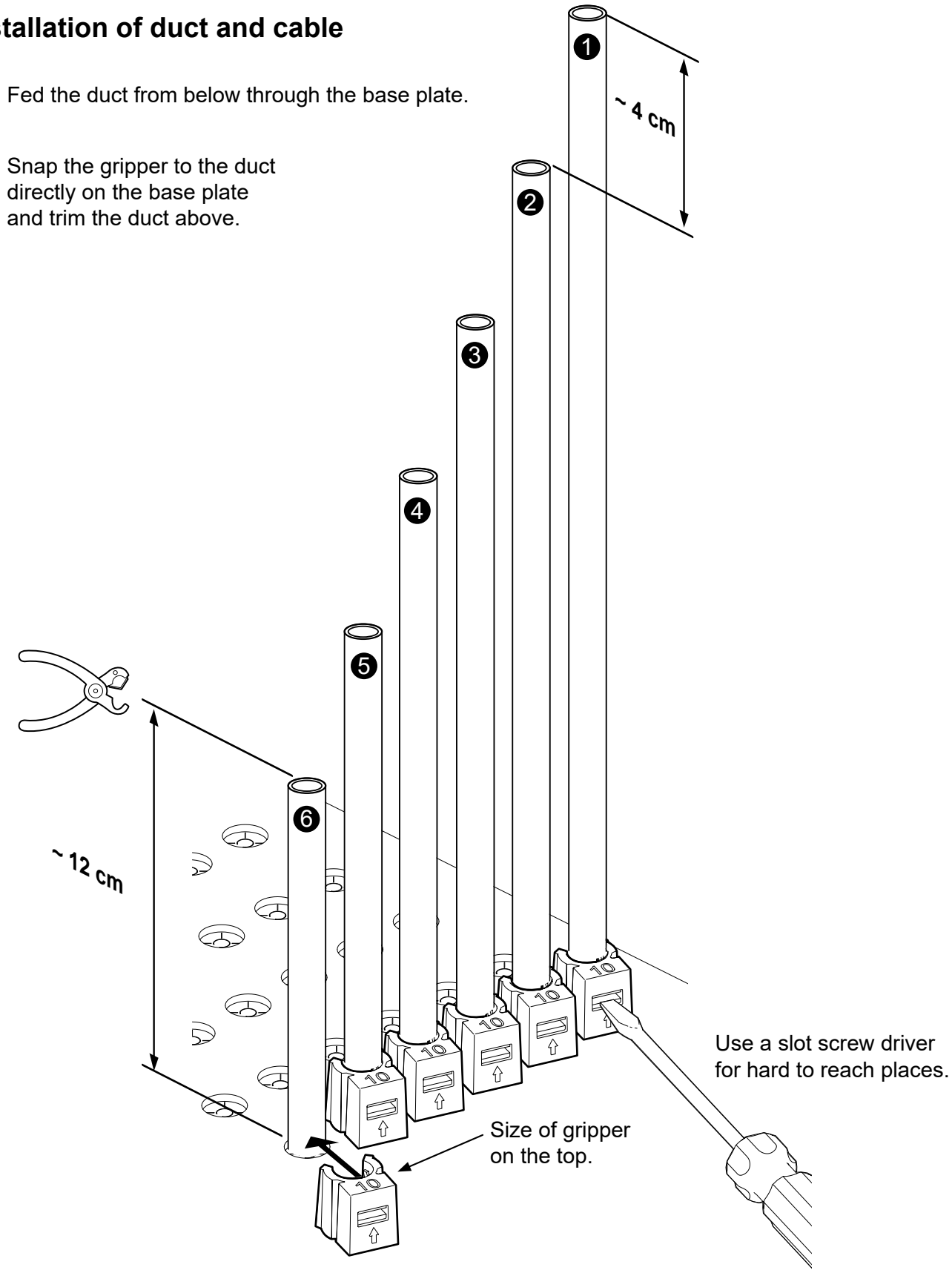

BELDEN
www.belden.com
These products may be protected by one or more patents. For further information, please visit: www.ppc-online.com/patents

Kitzingstr. 1-5, 12277 Berlin, Germany
info@sichert.com
+49 30 74707-0
www.sichert.com

Routing of cables

See page 19.

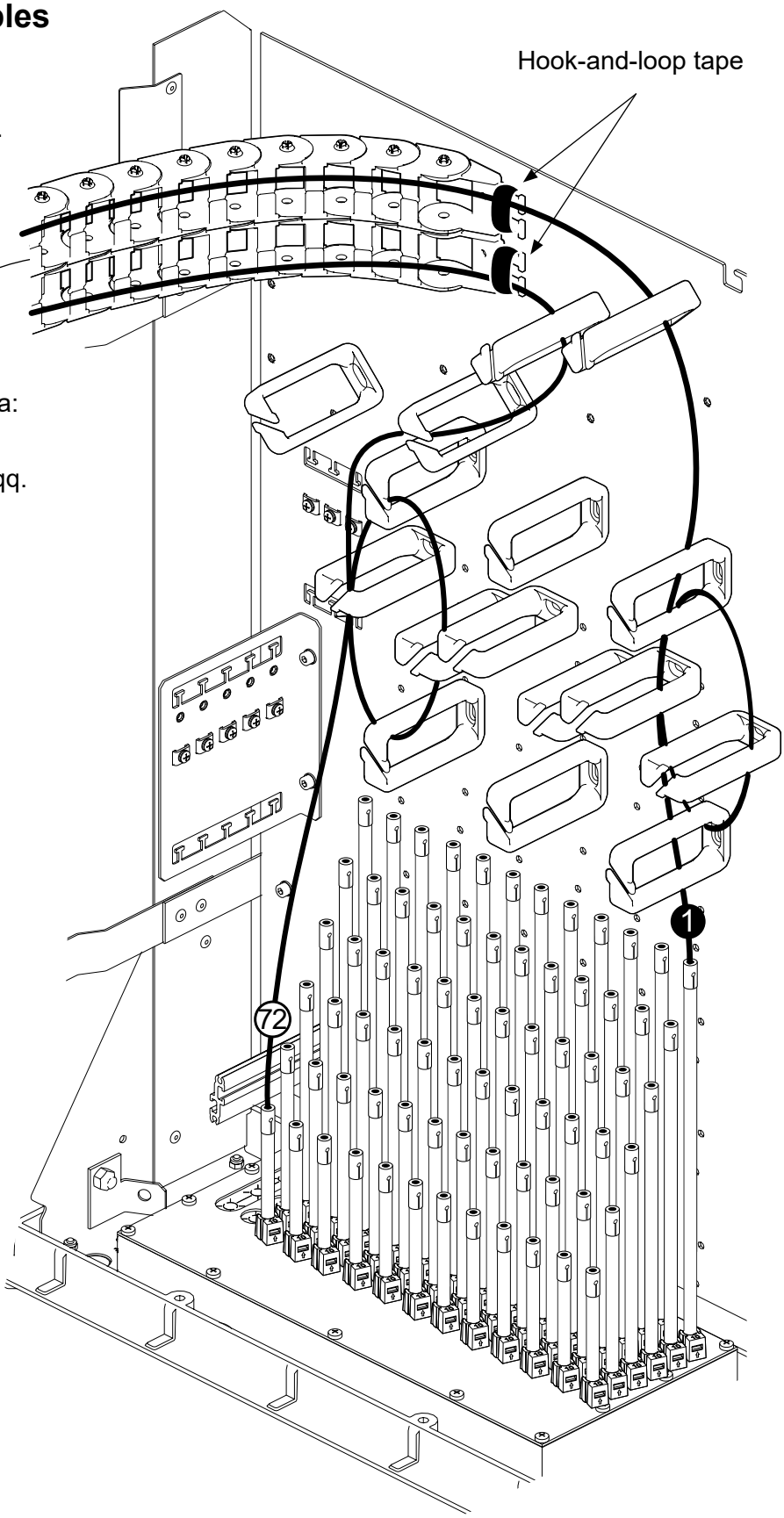

page 32 et sqq.

BELDEN
www.belden.com
These products may be protected by one or more patents. For further information, please visit: www.ppc-online.com/patents

Kitzingstr. 1-5, 12277 Berlin, Germany
info@sichert.com
+49 30 74707-0
www.sichert.com

10 Splice area

10.1 Cover for fiber trays

Tray cover

The cover serves the protection of the fiber trays.

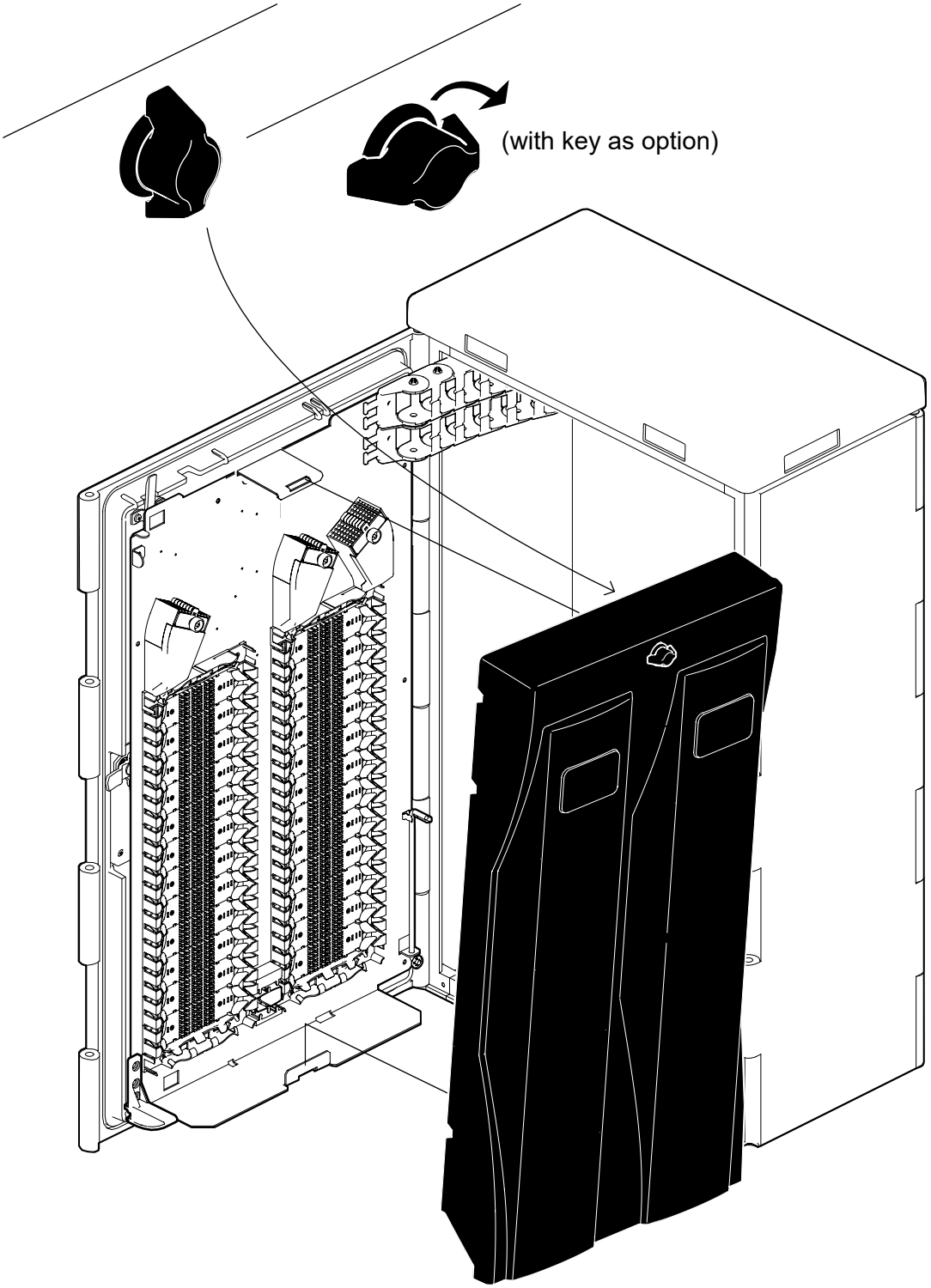

BELDEN
www.belden.com
These products may be protected by one or more patents. For further information, please visit: www.ppc-online.com/patents

Kitzingstr. 1-5, 12277 Berlin, Germany
info@sichert.com
+49 30 74707-0
www.sichert.com

Splice area

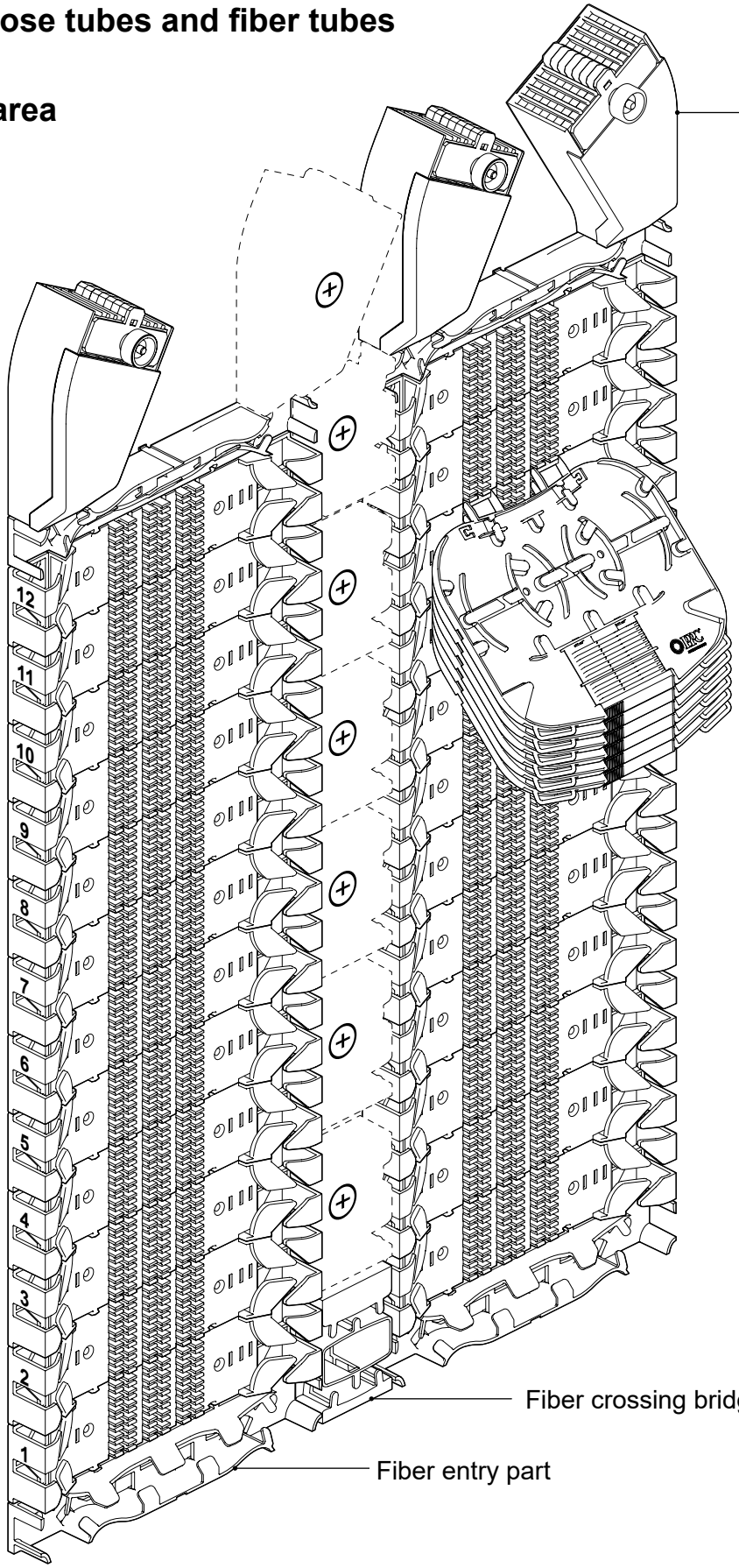

⊕ Upgradable or in some versions:

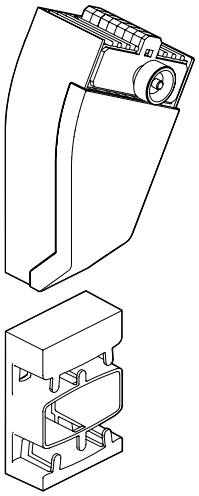

Previous Contents

Strain relief block

1 Cables, loose tubes and fiber tubes are retained in the strain relief blocks.

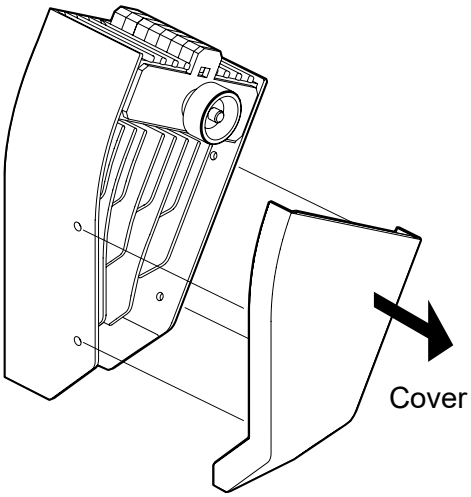

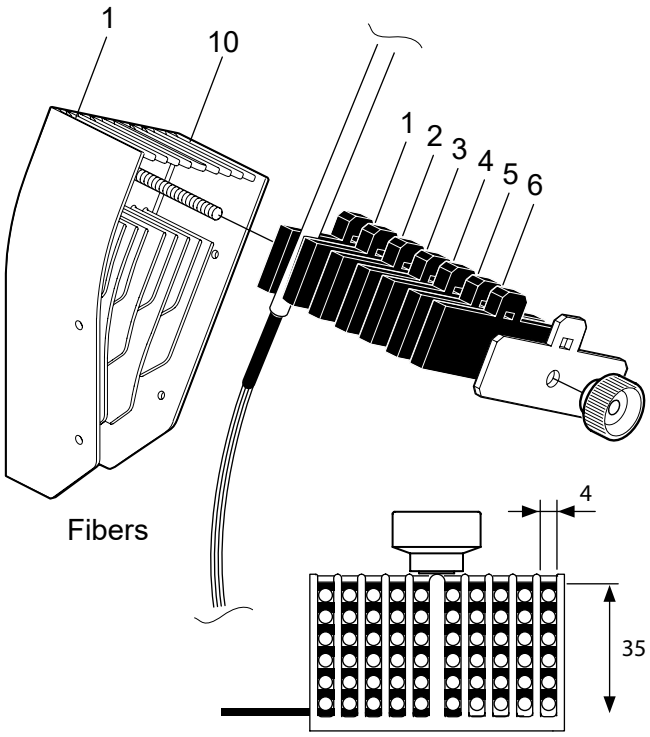

(e.g. 60x Ø 3.2)

2 **Observe the stripping length.**

Use only the approved tools for cutting.

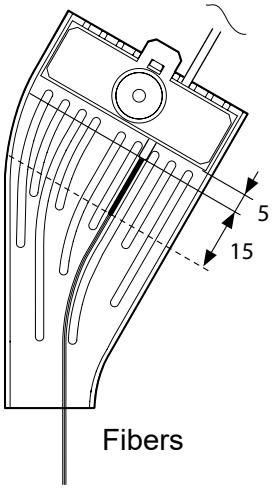

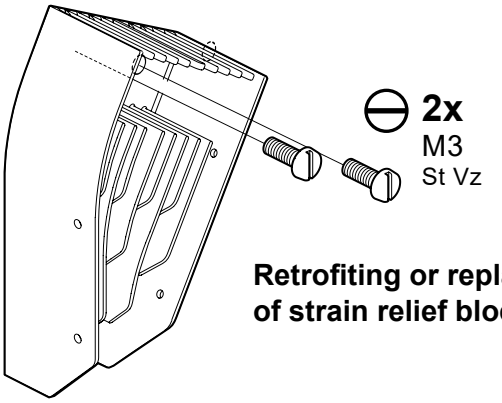

Retrofiting or replacement of strain relief block

(Dimensions in mm)

Previous Contents

10.3 Cable and fiber routing

Sample: scheme with splitter

① Main cable storage, splitter trays, splitter fibers storage

② Distribution cable trays

Avoid crossing over cables, loose tubes and fibers.

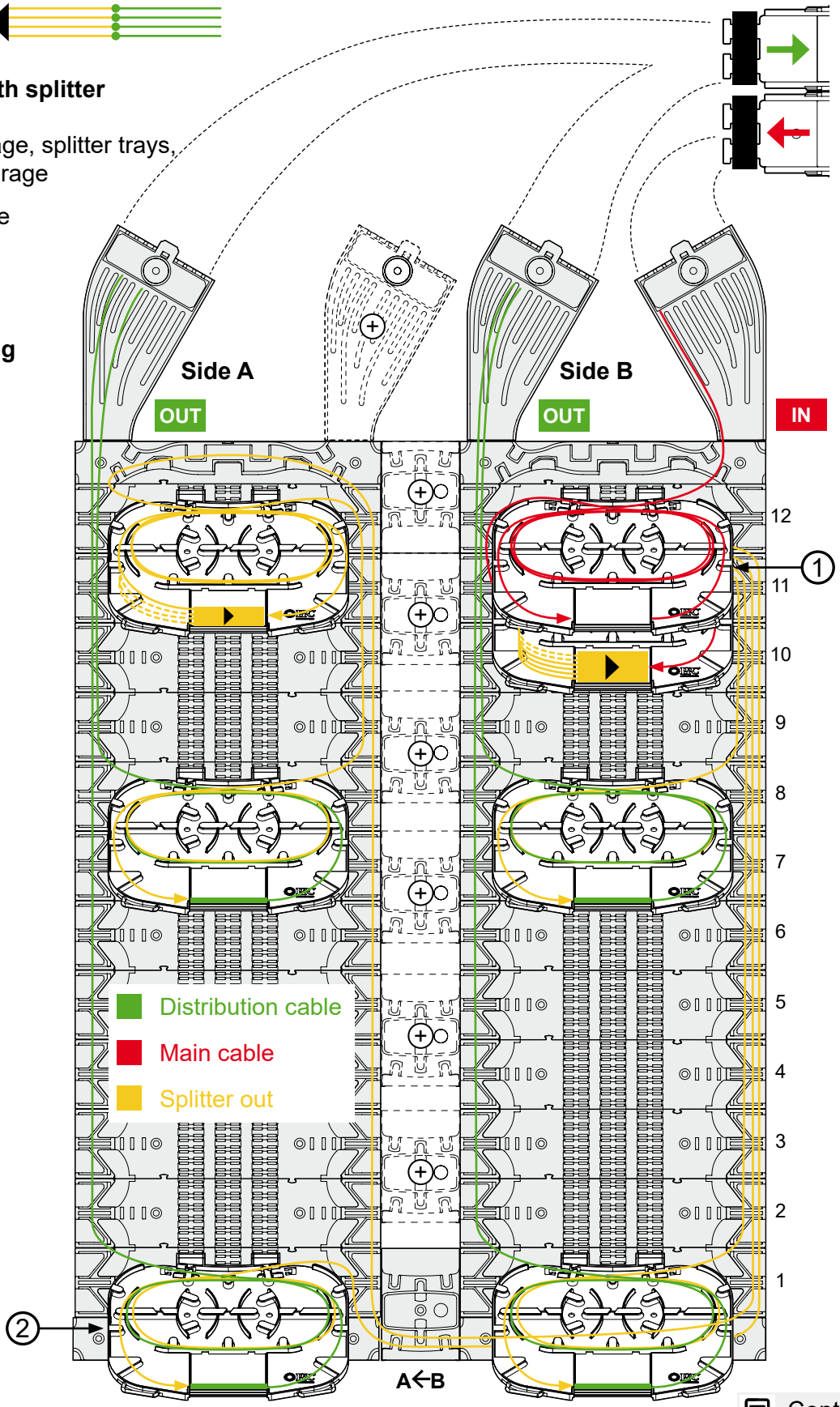

BELDEN
www.belden.com
These products may be protected by one or more patents. For further information, please visit: www.ppc-online.com/patents

Kitzingstr. 1-5, 12277 Berlin, Germany
info@sichert.com
+49 30 74707-0
www.sichert.com

Sample: scheme direct connection (PtP)

① Main cable trays

② Distribution cable trays for direct connections

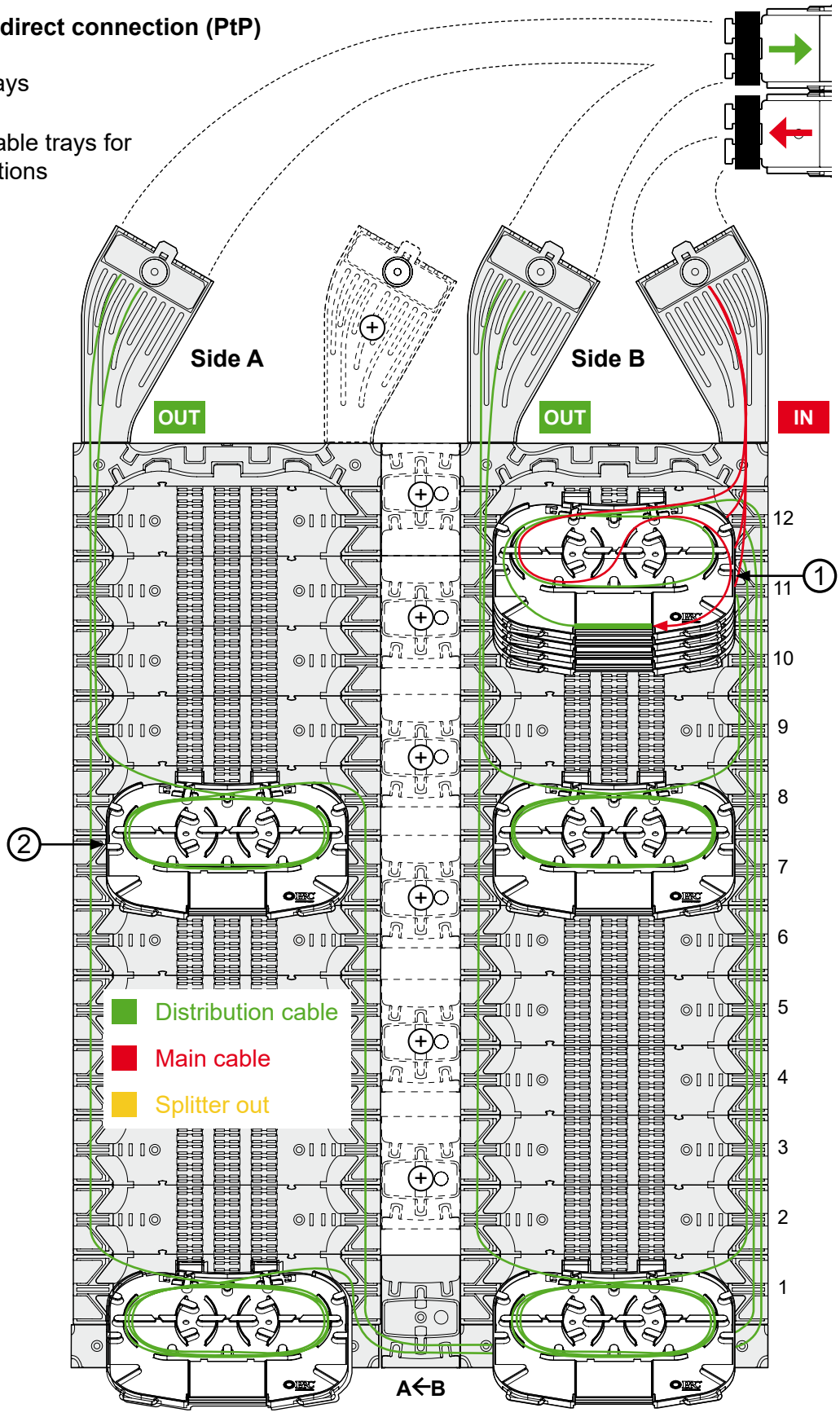

BELDEN
www.belden.com
These products may be protected by one or more patents. For further information, please visit: www.ppc-online.com/patents

Kitzingstr. 1-5, 12277 Berlin, Germany
info@sichert.com
+49 30 74707-0
www.sichert.com

(Scheme with
retrofit components)

Sample: scheme collocation + cascading

① Main cable storage, splitter trays, splitter fibers storage

② Distribution cable and collocation trays

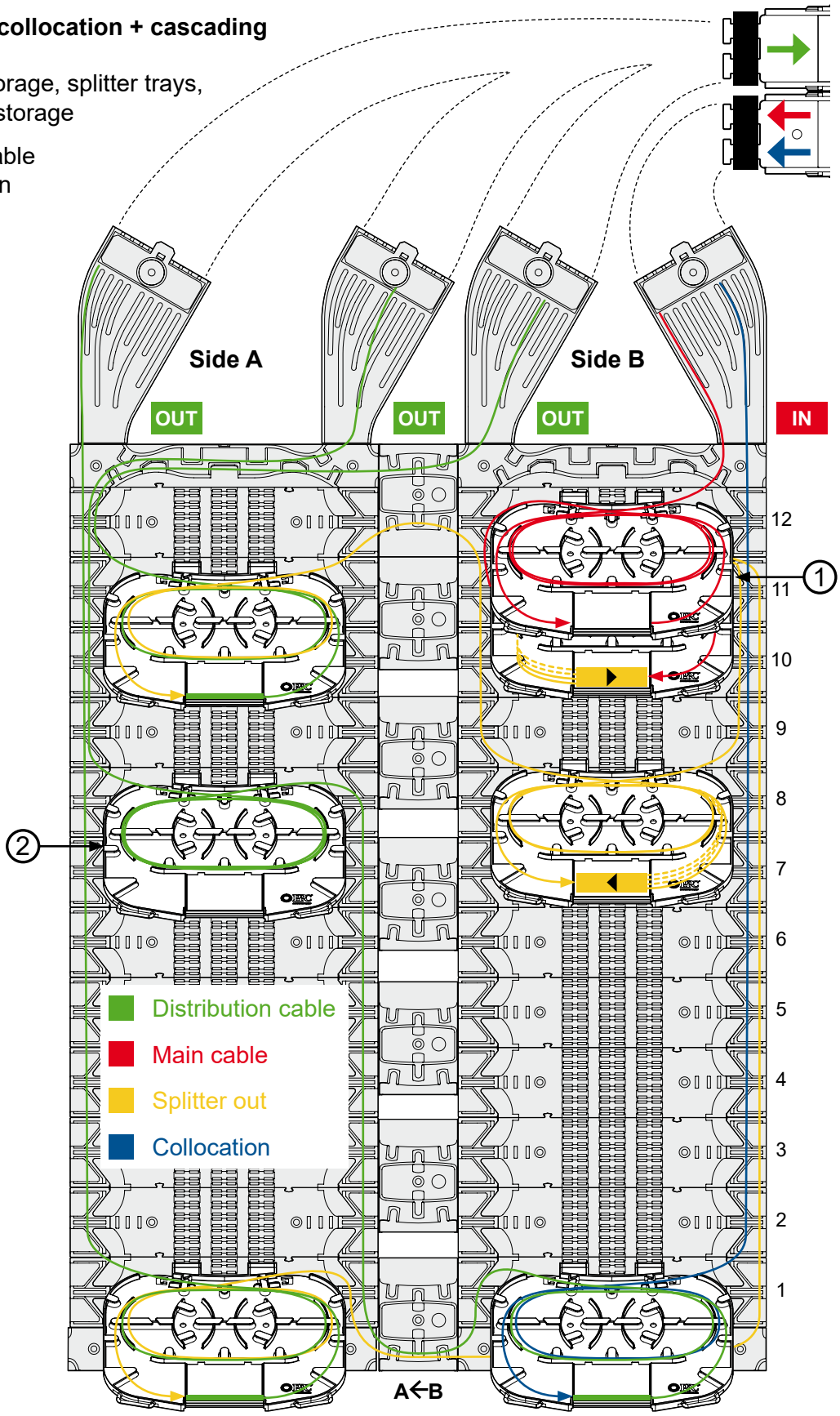

BELDEN
www.belden.com
These products may be protected by one or more patents. For further information, please visit: www.ppc-online.com/patents

Kitzingstr. 1-5, 12277 Berlin, Germany
info@sichert.com
+49 30 74707-0
www.sichert.com

11 Fiber tray system
Cornerstone Fiber Management System

General notes must be observed - see page 10.

Splice tray holder with telescopic fiber guides

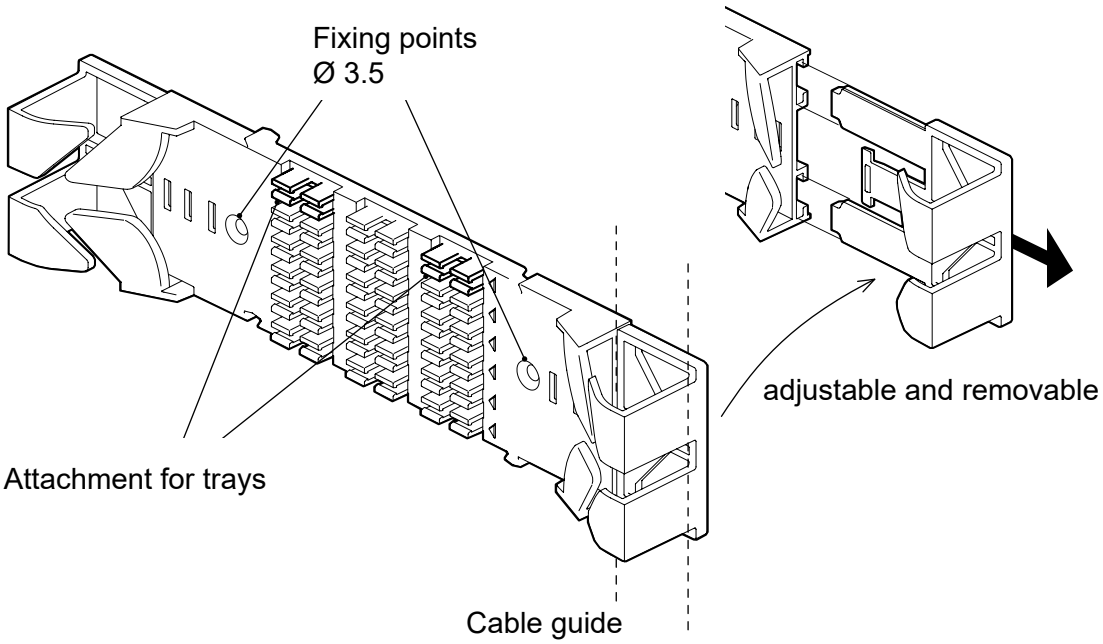

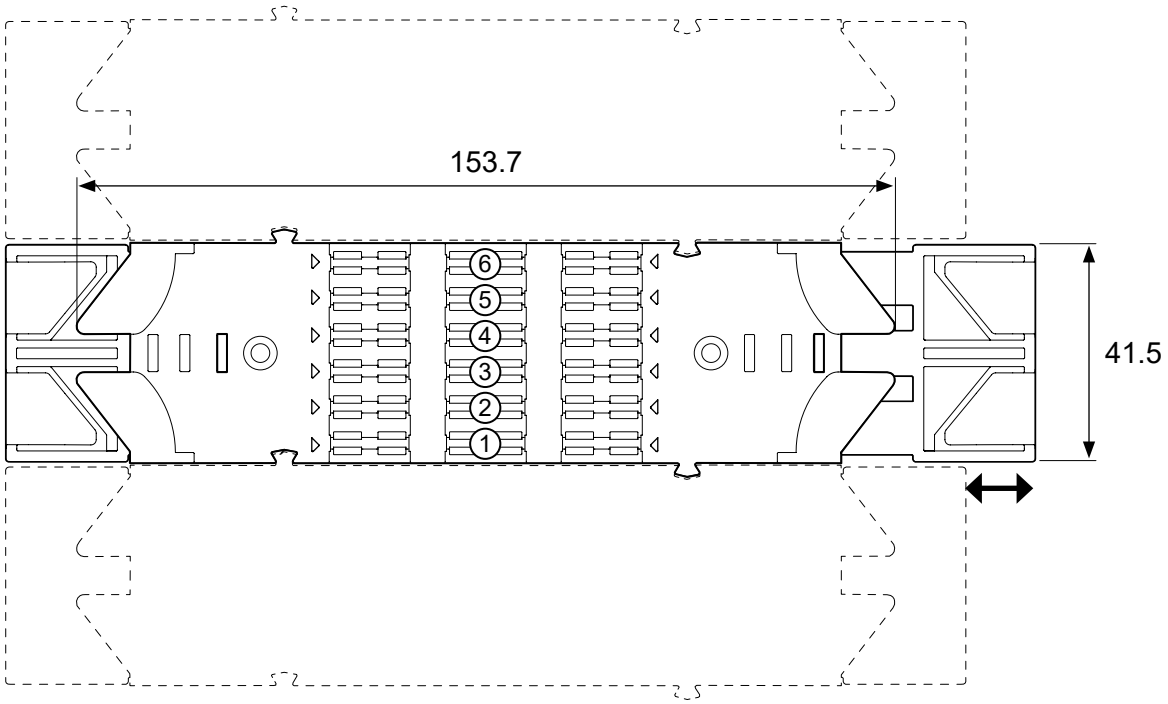

Material: PC/ABS, RAL 7035

(Dimensions in mm)

Previous

Contents

Splice tray SC

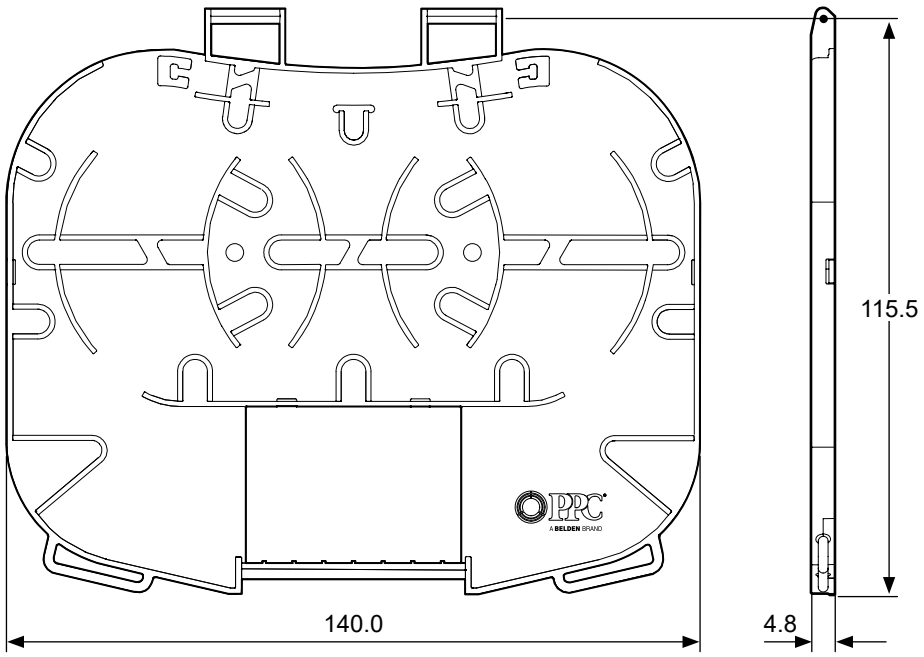

Material: PC/ABS, RAL 7035

(Dimensions in mm)

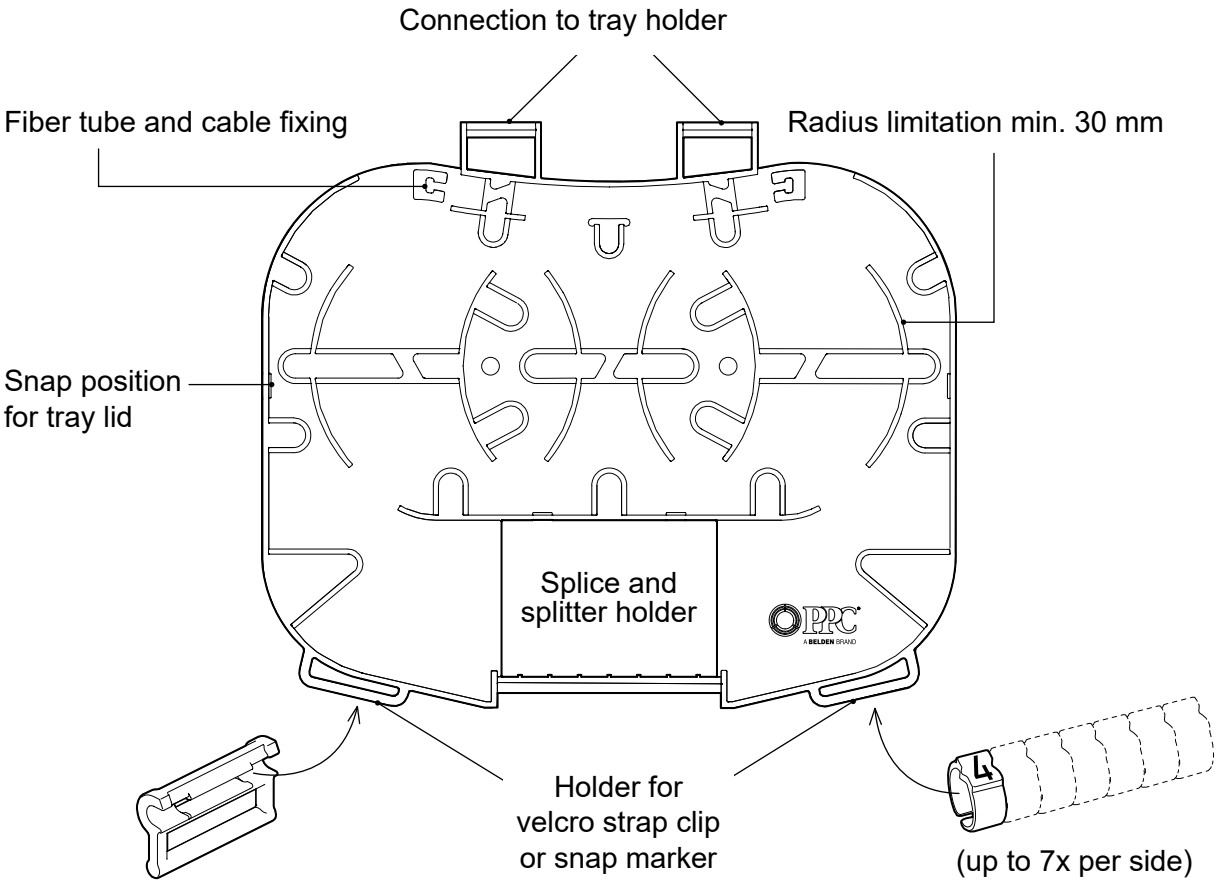

BELDEN
www.belden.com
These products may be protected by one or more patents. For further information, please visit: www.ppc-online.com/patents

Kitzingstr. 1-5, 12277 Berlin, Germany
info@sichert.com
+49 30 74707-0
www.sichert.com

Splice tray SE

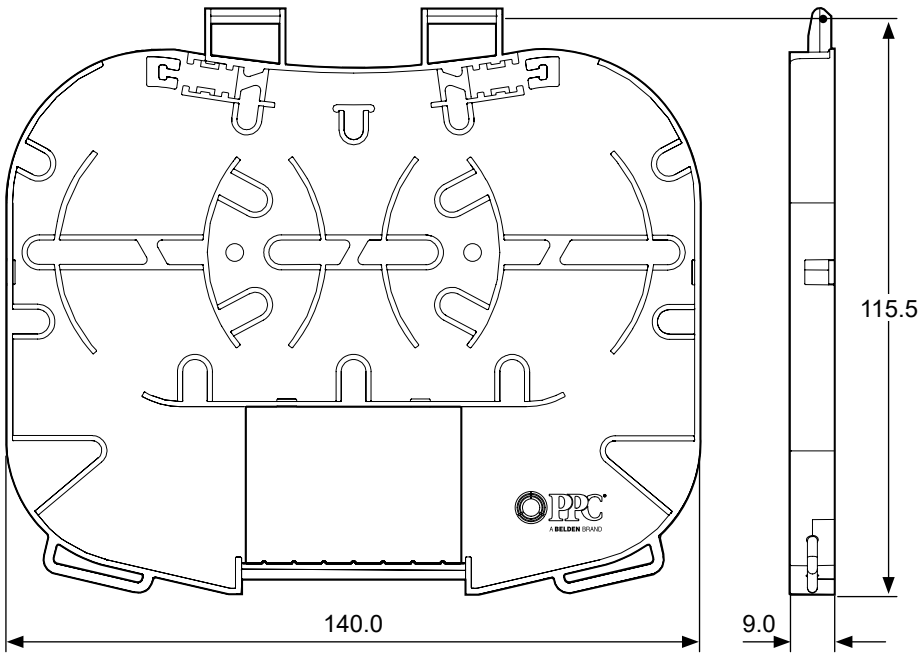

Material: PC/ABS, RAL 7035

(Dimensions in mm)

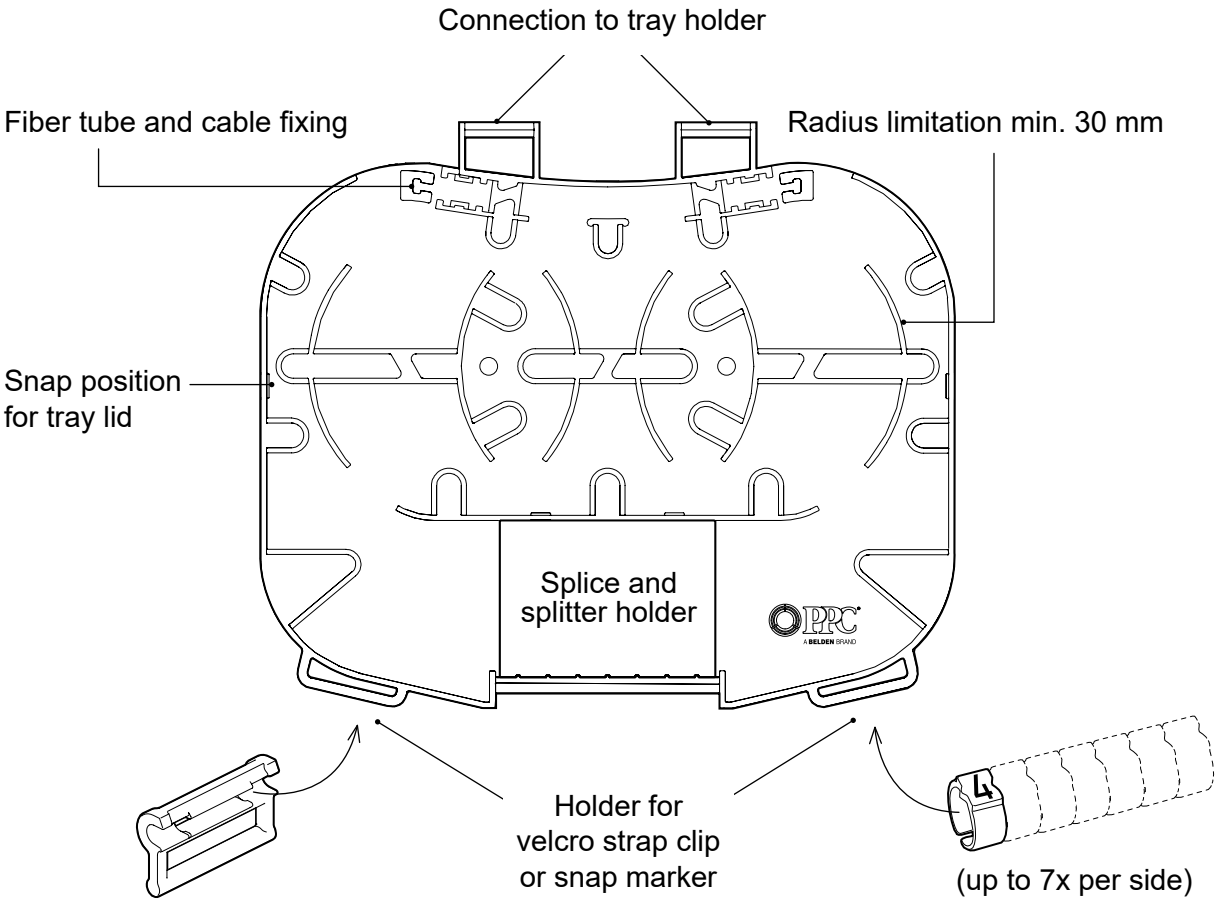

BELDEN
www.belden.com
These products may be protected by one or more patents. For further information, please visit: www.ppc-online.com/patents

Kitzingstr. 1-5, 12277 Berlin, Germany
info@sichert.com
+49 30 74707-0
www.sichert.com

Holder for splice protectors or splitters

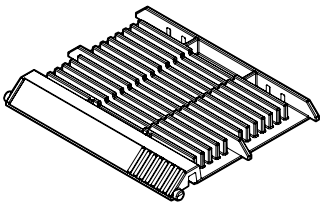

12 ANT splice holder SC
For 12x ANT splice protector

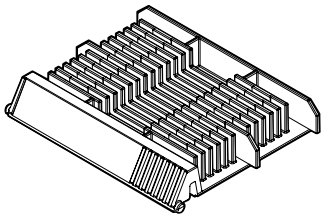

24 ANT splice holder SE
For 24x ANT splice protector

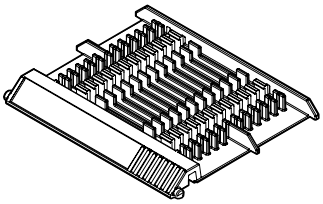

12 Heat shrink splice holder SC
For 12x heat shrink splice protector 1.6 mm

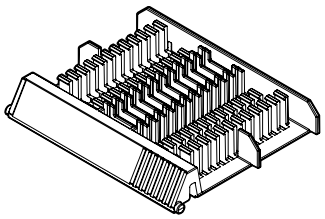

24 Heat shrink splice holder SE
For 24x heat shrink splice protector 1.6 mm

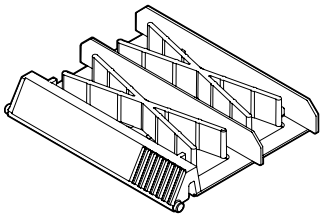

Ribbon and PLC splitter holder SE
For 4x PLC splitter basic type 4 x 4 x 40 mm:
1x4, 1x8, 1x16, 2x2, 2x4, 2x8

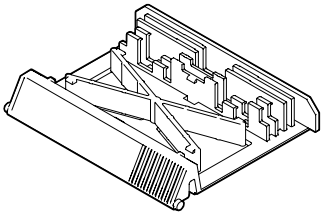

Splice and splitter holder SE
For 4x PLC splitter basic type 4 x 4 x 40 mm
and 4 x 7 x 55 mm:
1:4, 1:8, 1:16, 1:32, 2:2, 2:4, 2:8, 2:16, 2:32
+ 4x ANT splice protector
+ 4x heat shrink splice protector 1.6 mm

Material: PC/ABS, RAL 7035

(Dimensions in mm)

Installation of the holder for splice protectors or splitters

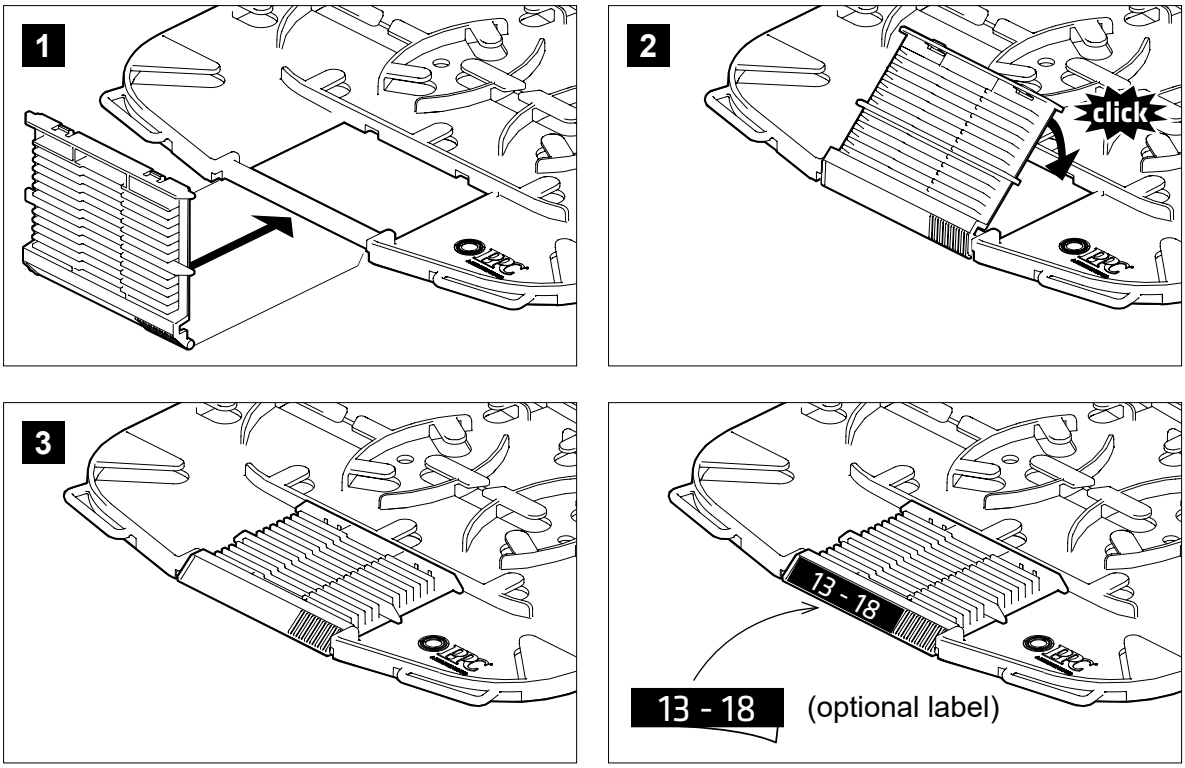

Installation of the trays

Dock at 45° and snap in.
Remove in reverse order.

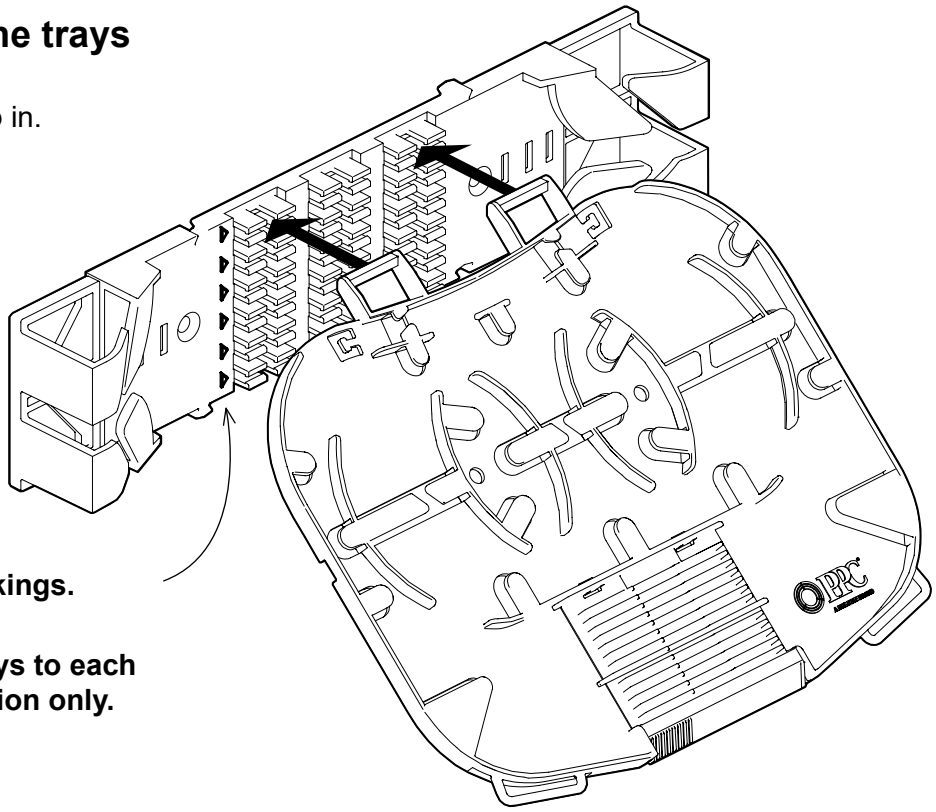

Note the markings.

Install SE trays to each second position only.

BELDEN
www.belden.com
These products may be protected by one or more patents. For further information, please visit: www.ppc-online.com/patents

Kitzingstr. 1-5, 12277 Berlin, Germany
info@sichert.com
+49 30 74707-0
www.sichert.com

Position of the trays

Tray module with splice trays SC

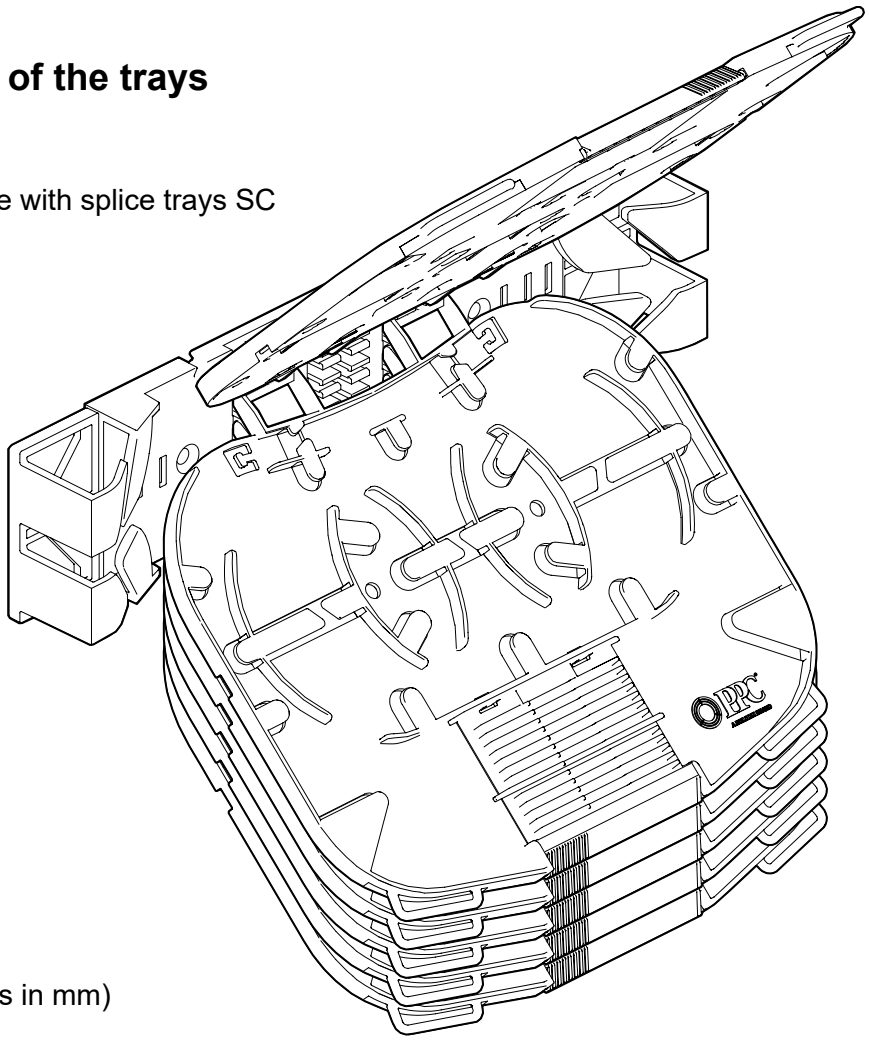

(Dimensions in mm)

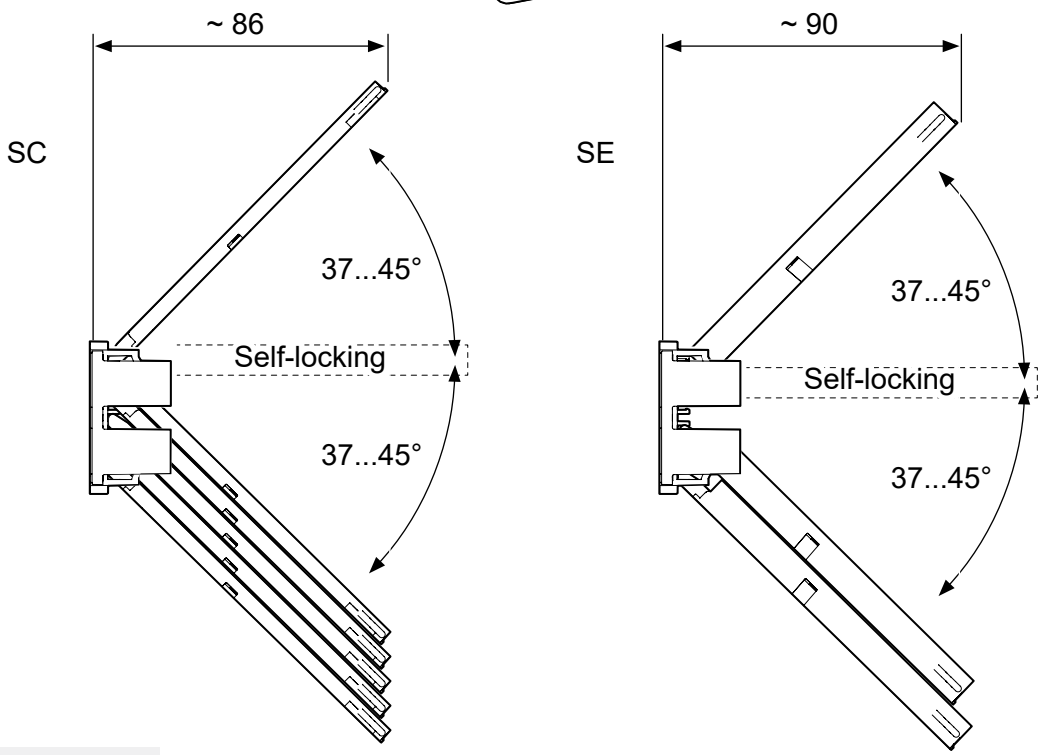

Previous
Contents

Fiber tube or cable fixing (SC+SE trays)

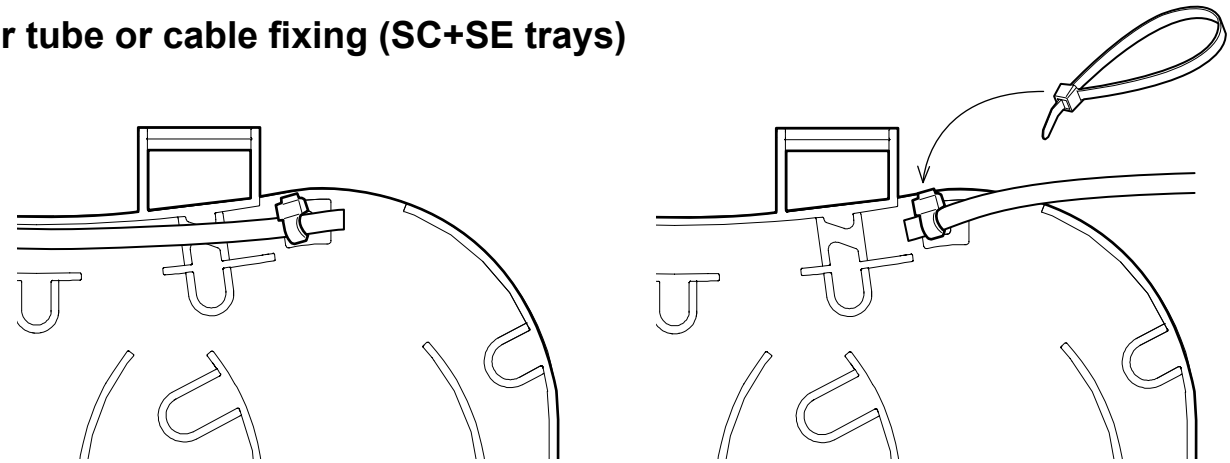

Fiber fixing with fiber retention housing (SE trays)

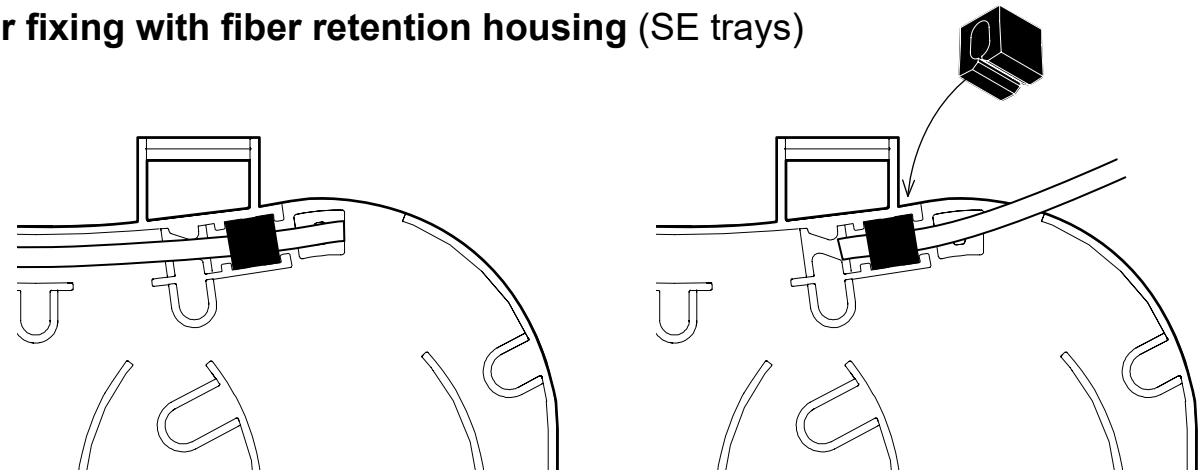

Fiber routing

The fiber can be placed anywhere inside the tray and should be able to move freely.

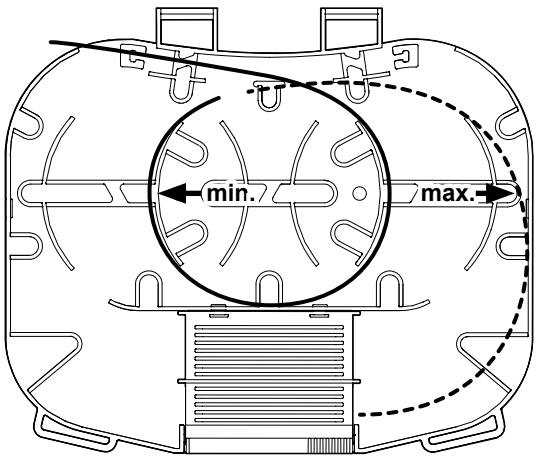

Ensure that the fibers are underneath the hold-down tabs.

BELDEN
www.belden.com
These products may be protected by one or more patents. For further information, please visit: www.ppc-online.com/patents

Kitzingstr. 1-5, 12277 Berlin, Germany
info@sichert.com
+49 30 74707-0
www.sichert.com

Samples for fiber routing

A Fiber feeding to the tray

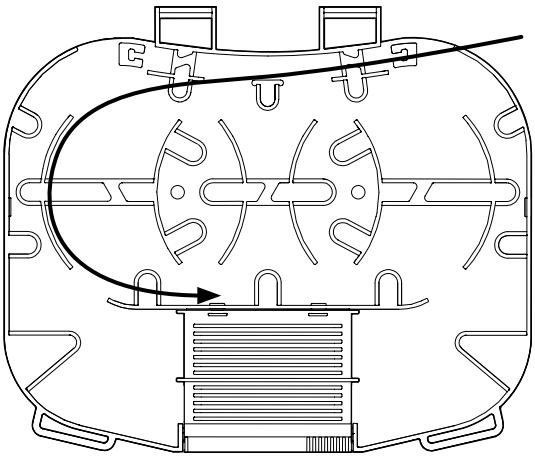

B Slack storage

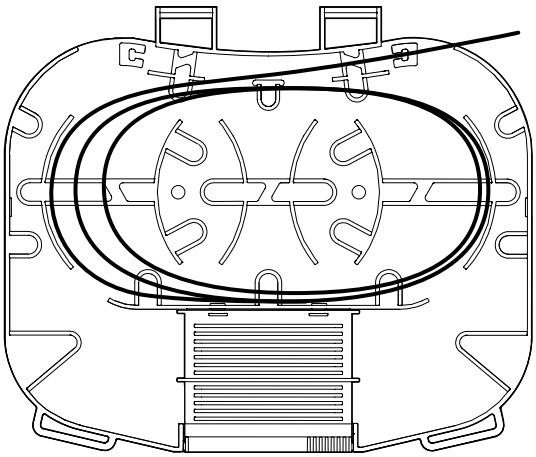

C Fiber routing for splicing

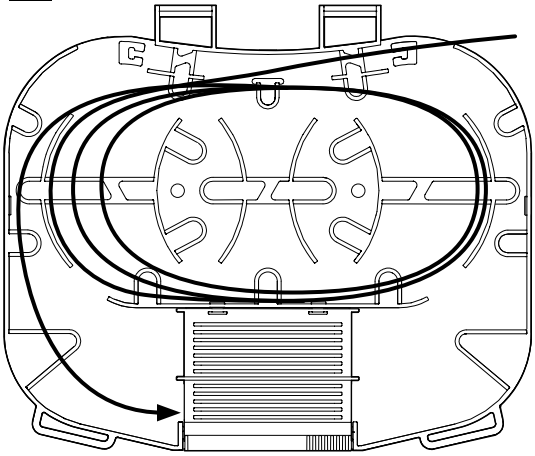

D Fiber routing with crossing (loop PtP)

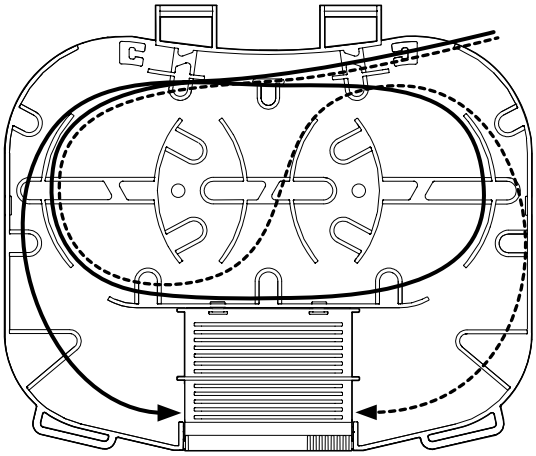

E Splice storage

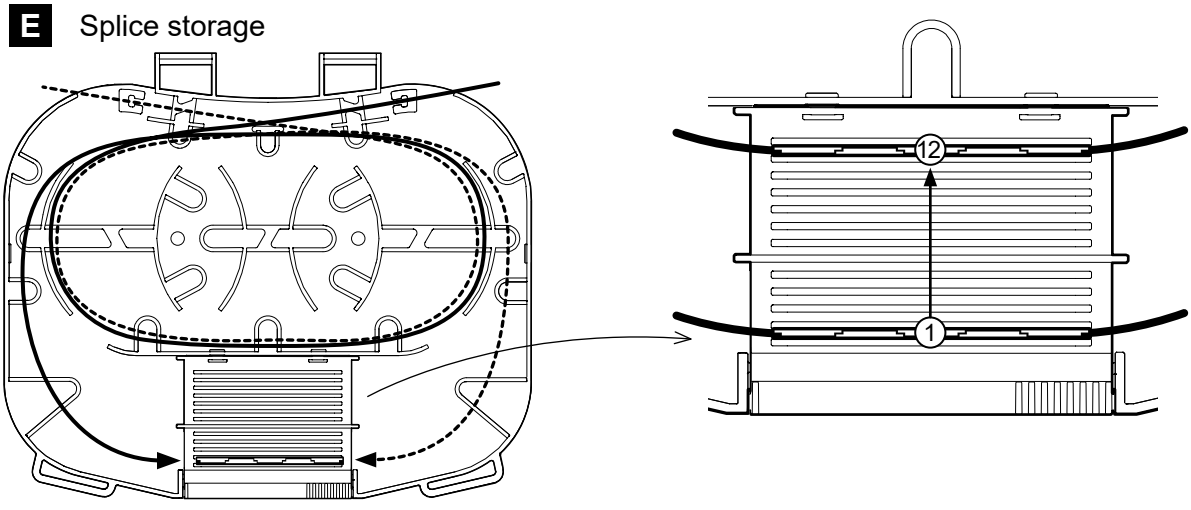

BELDEN
www.belden.com
These products may be protected by one or more patents. For further information, please visit: www.ppc-online.com/patents

Kitzingstr. 1-5, 12277 Berlin, Germany
info@sichert.com
+49 30 74707-0
www.sichert.com

Splitter storage

2x PLC
(basic type 4 x 4 x 40 mm
and 4 x 7 x 55 mm)

1:2, 1:4, 1:8, 1:16, 1:32
2:2, 2:4, 2:8, 2:16, 2:32
+
4x ANT splice protector
4x heat shrink splice protector 1.6 mm

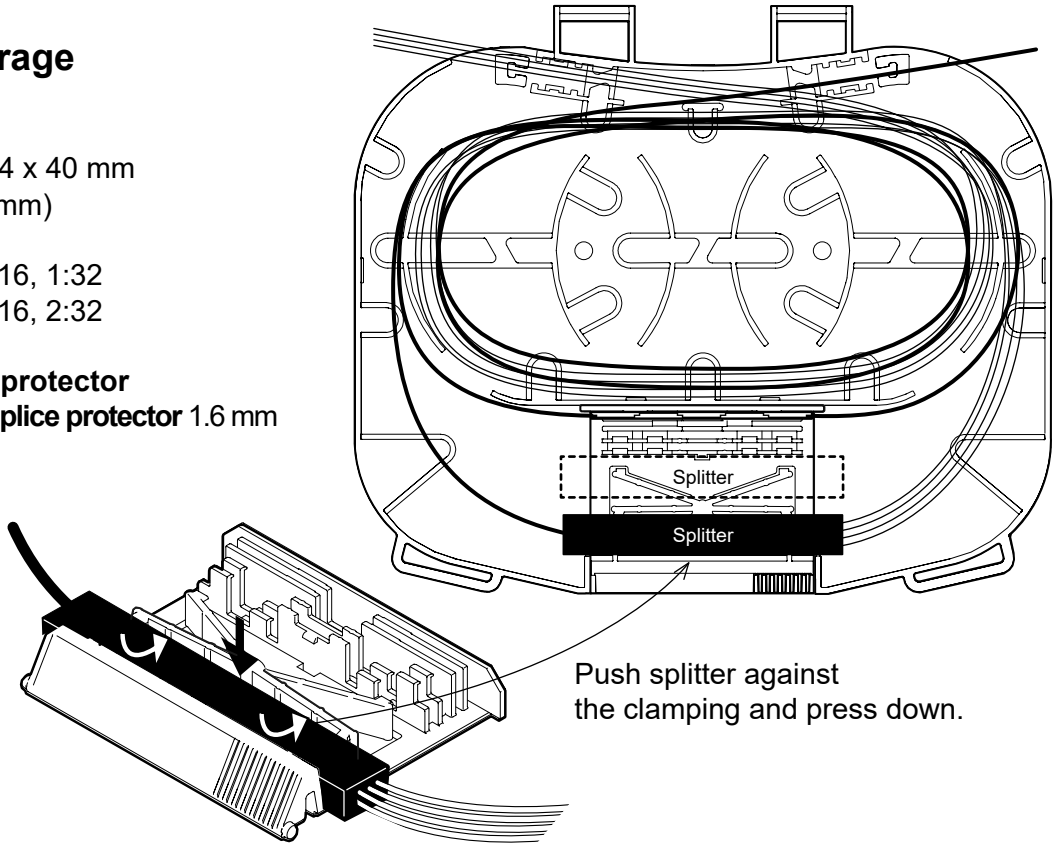

Push splitter against
the clamping and press down.

4x PLC
(Basic type 4 x 4 x 40 mm)

1:2, 1:4, 1:8, 1:16
2:2, 2:4, 2:8

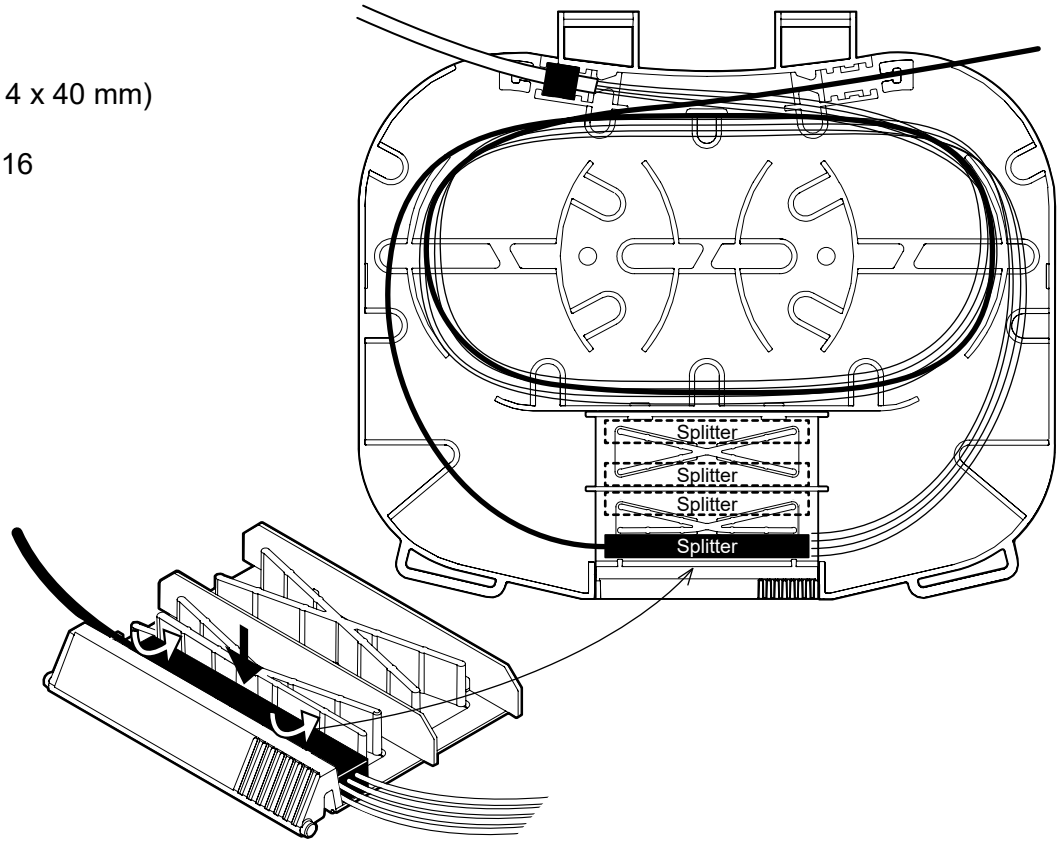

BELDEN
www.belden.com
These products may be protected by one or more patents. For further information, please visit: www.ppc-online.com/patents

Kitzingstr. 1-5, 12277 Berlin, Germany
info@sichert.com
+49 30 74707-0
www.sichert.com

Splice deposition

(sample deposition of crimp splices in SE tray on 2 levels)

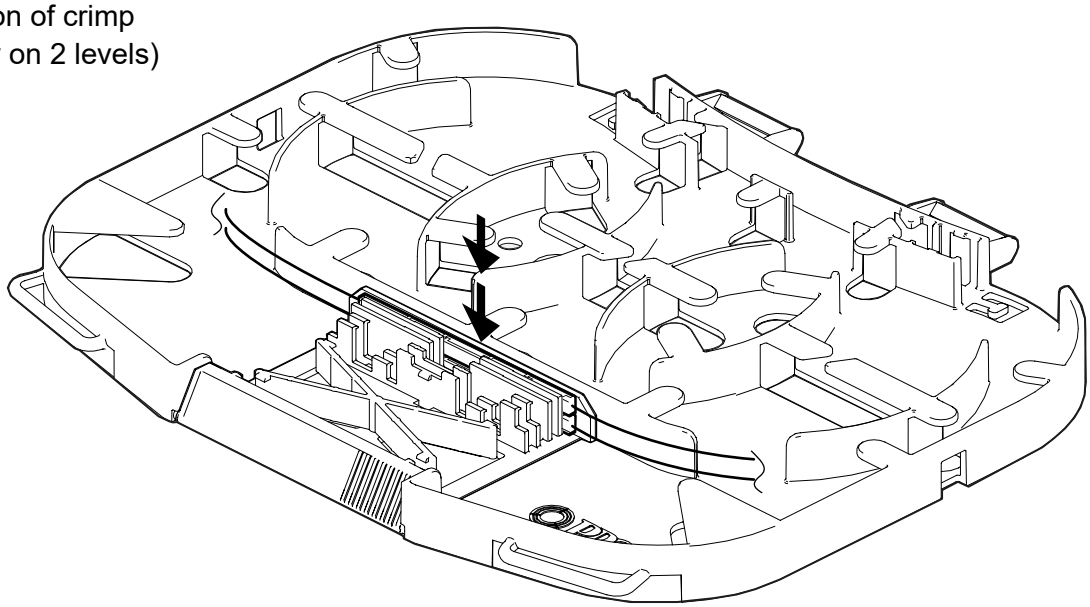

Tray lid

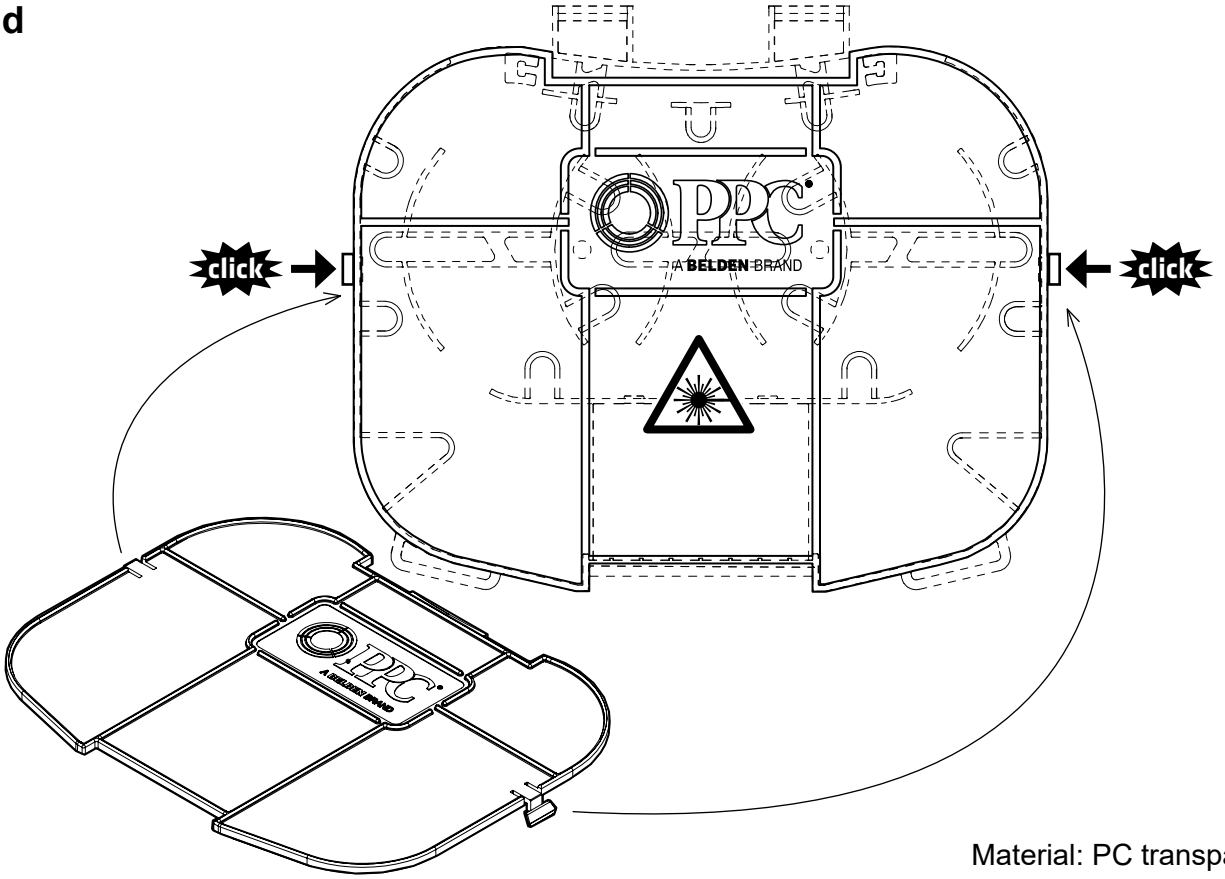

Material: PC transparent

BELDEN
www.belden.com
These products may be protected by one or more patents. For further information, please visit: www.ppc-online.com/patents

Kitzingstr. 1-5, 12277 Berlin, Germany
info@sichert.com
+49 30 74707-0
www.sichert.com

12 Replacement of the cabinet

Loose the mounting plate

1 Remove the screws on the right side [A].

[A] **4x**
M5
A2

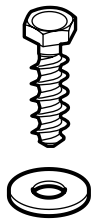

2 Remove the fiber tray cover
and the screws [B] of the mounting plate Ⓜ.

[B] **7x**
M5
StVz

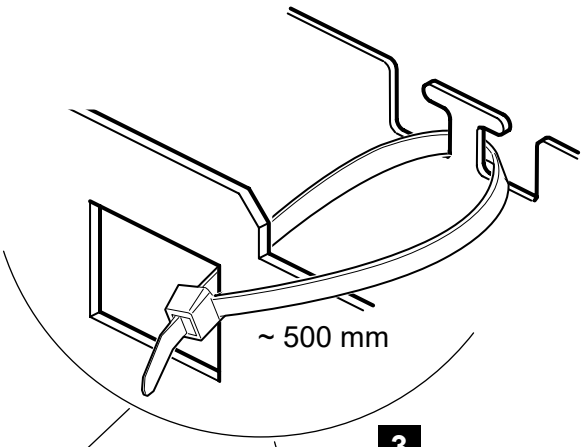

3

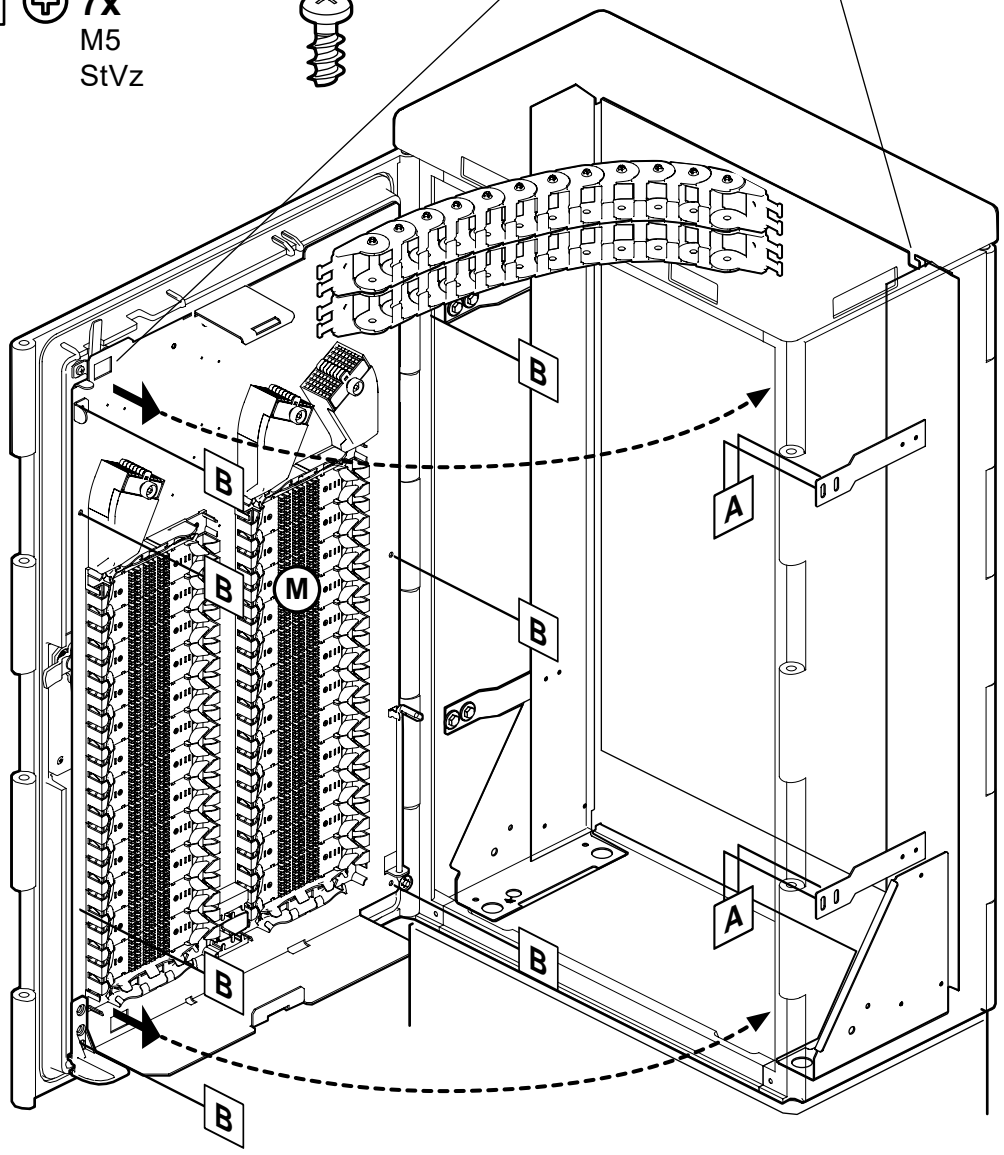

Previous
Contents

Replace the cabinet

4 Remove the screws on the left side [C] and lift the cabinet carefully.

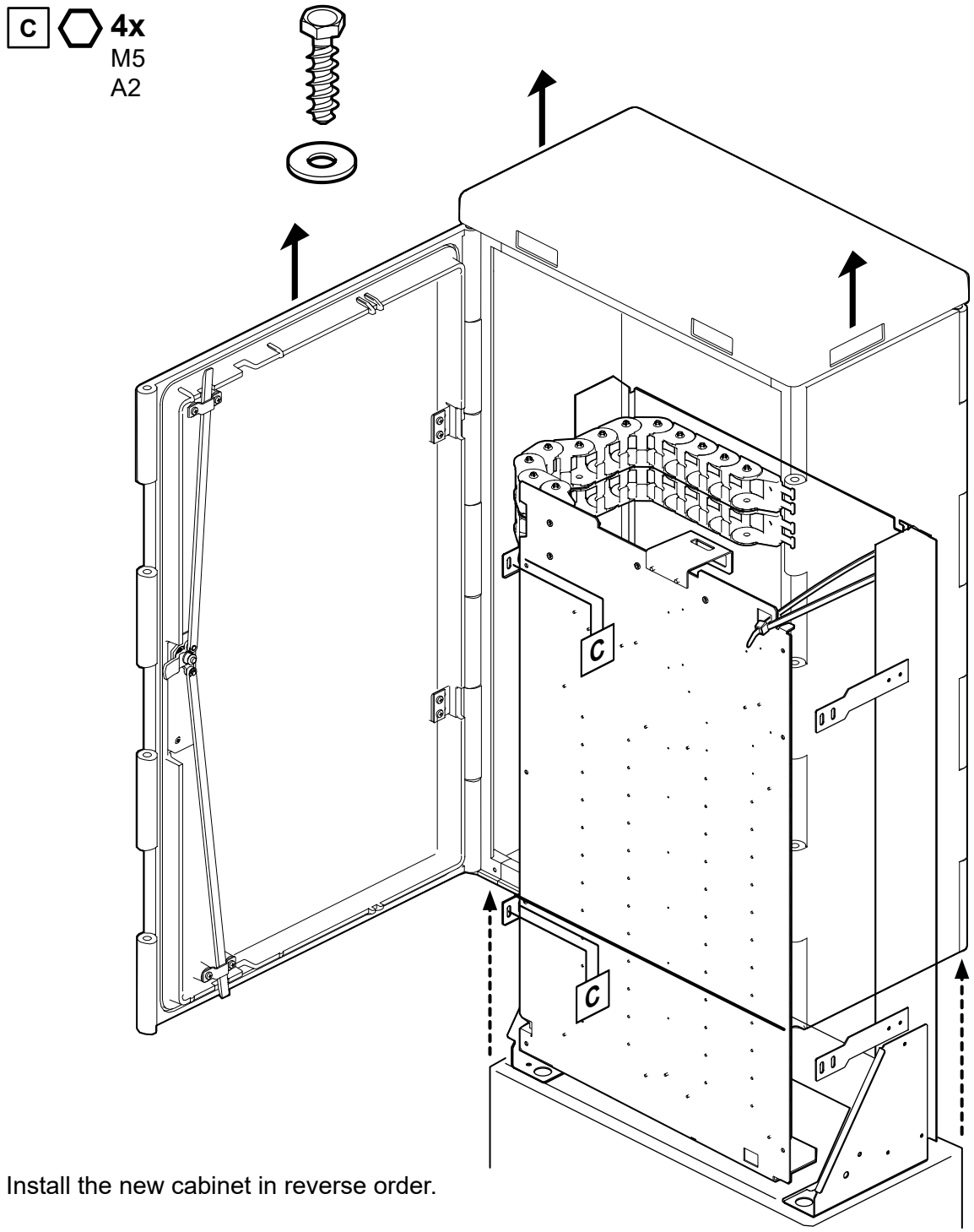

5 Install the new cabinet in reverse order.

BELDEN
www.belden.com
These products may be protected by one or more patents. For further information, please visit: www.ppc-online.com/patents

Kitzingstr. 1-5, 12277 Berlin, Germany
info@sichert.com
+49 30 74707-0
www.sichert.com

13 Order data

Cabinet (standard)

Article	Part number
FCC6 72/7-10 (without trays) Double locking mechanism metal	54.2207.00.00
FCC6 72/7-10 96SC CS Double locking mechanism metal	54.2209.00.00
FCC6 72/7-10 96SC HS Double locking mechanism metal	54.2211.00.00

Cabinet (overlength storage/loose tube storage)

Article	Part number
FCC6 72/7-10 OL (without trays) Double locking mechanism metal	54.2208.00.00
FCC6 72/7-10 96SC CS OL Double locking mechanism metal	54.2210.00.00
FCC6 72/7-10 96SC HS OL Double locking mechanism metal	54.2212.00.00

Accessories - clips and gripper

Article		Part number
Clip rail installation:		
Gripper for duct Ø 7 mm (50 pc)		59.2600.20.00
Gripper for duct Ø 10 mm (50 pc)		59.2600.23.00
Gripper for duct Ø 12 mm (50 pc)		59.2600.21.00
Gripper for duct Ø 14 mm (50 pc)		59.2600.35.00
Gripper for duct Ø 16 mm (50 pc)		59.2600.36.00
Gripper for duct Ø 20 mm (50 pc)		59.2600.37.00
End plate for clip rail (10 pc)	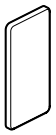	70.1959.18.00
Kit for main cable ducts	Grippers for clip rail installation: 9x Ø 12 mm, 9x Ø 14 mm 9x Ø 16 mm, 9x Ø 20 mm + 6x End plate for clip rail	54.4273.04.00

BELDEN
www.belden.com
These products may be protected by one or more patents. For further information, please visit: www.ppc-online.com/patents

Kitzingstr. 1-5, 12277 Berlin, Germany
info@sichert.com
+49 30 74707-0
www.sichert.com

Article		Part number
Base plate installation:		
Gripper for duct Ø 7 mm (50 pc)	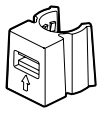	59.2600.29.00
Gripper for duct Ø 10 mm (50 pc)		59.2600.24.00

Accessories - routing and strain relief components

Article		Part number
Upgrade kit ground rod holder Ø 8...10 mm for basic frame	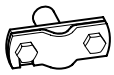	59.2514.05.00
Upgrade kit: overlength storage for loose tubes	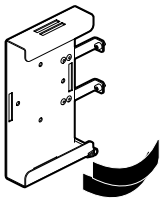	59.2600.32.00
Upgrade kit: Strain relief block	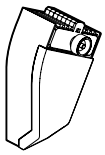	54.0306.13.00
Upgrade kit: Cable routing 75	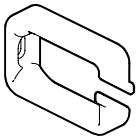	54.0302.04.00
Two-sided hook-and-loop tape (25 m roll)		54.8117.11.05

BELDEN
www.belden.com
These products may be protected by one or more patents. For further information, please visit: www.ppc-online.com/patents

Kitzingstr. 1-5, 12277 Berlin, Germany
info@sichert.com
+49 30 74707-0
www.sichert.com

Accessories - Cornerstone Fiber Management System

Article		Part number
Splice tray SC for 12 crimp splices CS	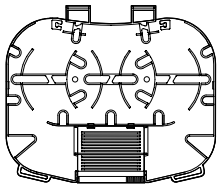	6x 54.0306.10.00
Splice tray SC for 12 heat shrink splices HS	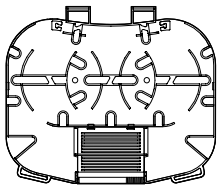	6x 54.0306.11.00
Splice tray SE for 24 crimp splices CS	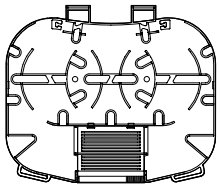	3x 54.0306.15.00
Splice tray SE for 24 heat shrink splices HS	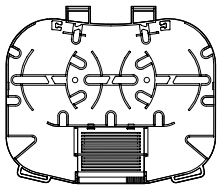	3x 54.0306.16.00
Splitter tray SE for 4x PLC splitter	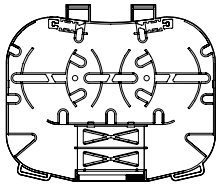	3x 54.0306.12.00
Splitter tray SE for 2x PLC splitter 4x crimp splices CS 4x heat shrink splices HS	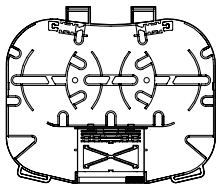	3x 54.0306.14.00
Tray lid	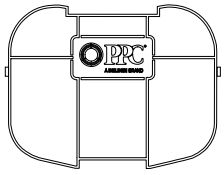	1x CSS019FS

BELDEN
www.belden.com
These products may be protected by one or more patents. For further information, please visit: www.ppc-online.com/patents

Kitzingstr. 1-5, 12277 Berlin, Germany
info@sichert.com
+49 30 74707-0
www.sichert.com

Article	Part number
Splitter: singlemode G.657.A1, 250µ, IN: 1.5m, OUT: 3.0m	
PLC 1x2 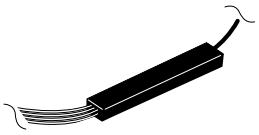	PL1023000000153040
PLC 1x4	PL1043000000153040
PLC 1x8	PL1083000000153040
PLC 1x16	PL1163000000153040
PLC 1x32	PL1323000000153040
Crimp splice protection (150x) CS, 30 x 3 x 1.2 mm	640002001-BLI
Press for crimp splice protector	SP-ANT-CRIMP-TOOL
Heat shrink splice protection (100x) HS Ø 0.5mm, length 40mm 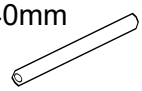	HSPS40100
Splice tray holder with telescopic fiber guides 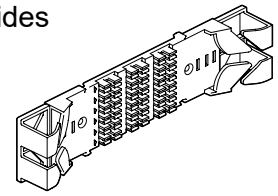	CSS007AS
Upgrade kit: Fiber crossing bridge 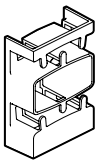	54.2207.04.00
Fiber entry part 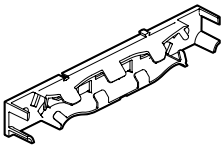	59.2732.02.02
Velcro strap clip grey (pack of 12)	CSS010A12
Tray markers (numbers) (pack of 300, white)	(upon request)

Cabinet replacement parts and locking system

Article	Part number
Spare parts	
Empty cabinet with swivel handle double locking mechanism metal	54.2057.00.00
Plinth	
Plinth	55.2001.00.00
Plinth with strain relief rail (c profile) in ground level	55.2013.00.00
Cover for upper plinth section 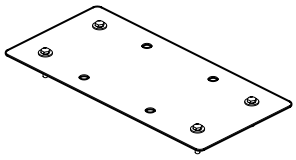	55.2009.00.00
Locking system	
Emergency key (for swivel handle without cylinder) 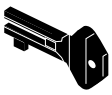	50.0531.02.19
Cylinder SICHERT 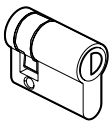	59.0531.02.12
Key SICHERT 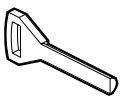	59.0531.02.04
1x Dummy cylinder 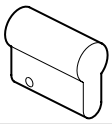	59.0531.02.05
Lock for tray cover with 1x key 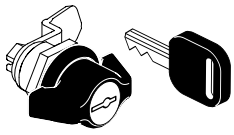	54.0302.05.00
Seal plug for foam plate	
Ø 4.7...8.7 mm (25x)	54.0001.13.00
Ø 8.0...14.3 mm (25x)	54.0001.14.00
Ø 11.1...17.4 mm (10x)	54.0001.15.00
Ø 19.1...23.5 mm (10x)	54.0001.16.00

BELDEN
www.belden.com
These products may be protected by one or more patents. For further information, please visit: www.ppc-online.com/patents

Kitzingstr. 1-5, 12277 Berlin, Germany
info@sichert.com
+49 30 74707-0
www.sichert.com

14 Disassembly and disposal information

Note the basic installation instructions for disassembly of the cabinet. Assemblies can be disassembled and materials can be sorted by type. Metal and synthetic parts should be unmixed and disposed of correctly. Please note the applicable disposable guidelines for all products.

BELDEN
www.belden.com
These products may be protected by one or more patents. For further information, please visit: www.ppc-online.com/patents

Kitzingstr. 1-5, 12277 Berlin, Germany
info@sichert.com
+49 30 74707-0

www.sichert.com

Name string

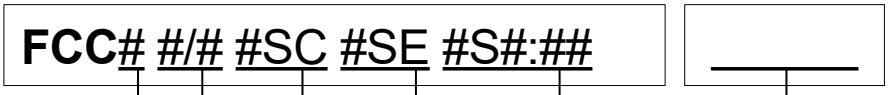

e.g.:
FCC8 96/7-10 108SC 3SE 1S1:8 CS

Cabinet size

3	SC3
4	UNI 4
6	UNI 6
8	UNI 8
11	UNI 11
15	UNI 15

Inbound entries
Number / Ø in mm

96/7-10 (= 96x Ø 7 bis10 mm)

Number of SC trays

108

Number of SE trays

3

Number of splitter and split ratio

1S1:8

Additional

HS = Heat Shrink, CS = Crimpspleiß, OL = Overlength